SHIRE

Scan here to find your local dealer

SHIRE 40

40hp @ 2400rpm

RCDII Emission Compliant

Type	4 stroke water cooled diesel
Number of Cylinders	4
Bore x Stroke	88mm x 90mm
Displacement	2190 cc
Max HP (ISO 3046/1)	40 hp @ 2400rpm
Peak Torque	94lb ft / 1600rpm
Combustion	Direct Injection
Electrical System	Starting motor D.C. twin 12V 50 amp & 12V 150 amp alternators
Cooling System	Keel or skin tank
Lubrication System	Forced lubrication by trochoid pump
Gearbox	PRM 150 Hydraulic
Reduction Ratio	2:1
Dry Weight (inc gearbox)	270 kg

Power Curves / Fuel Consumption

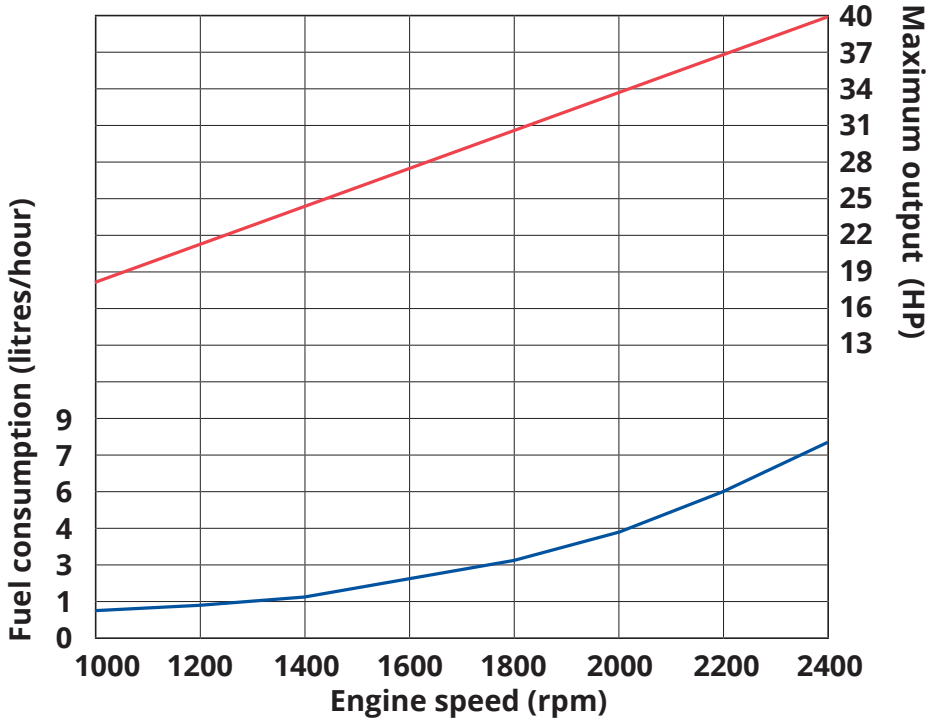

Dimensions

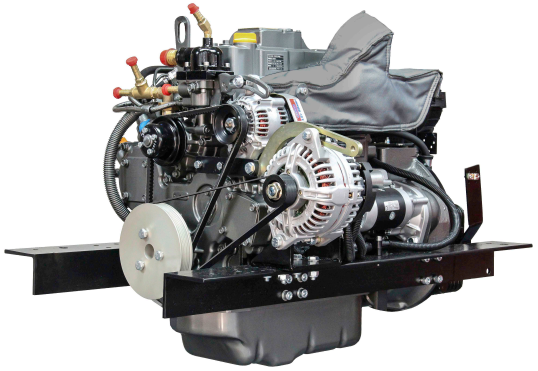

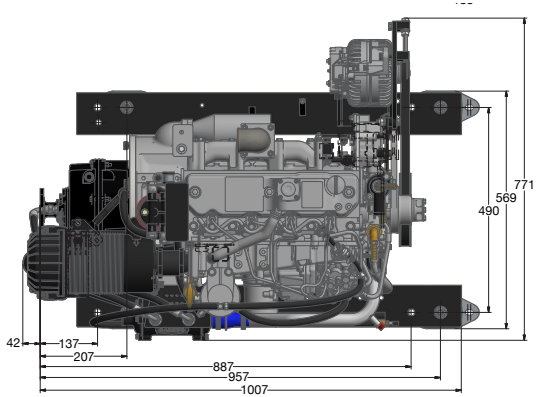

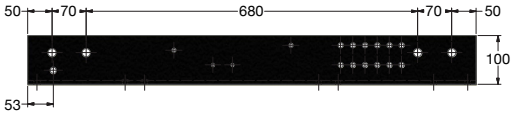

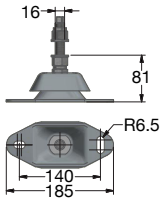

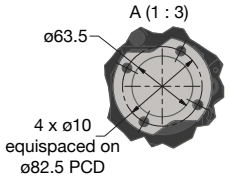

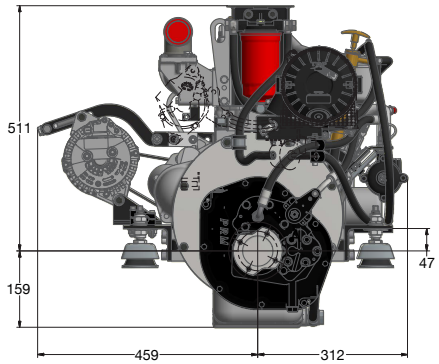

12 volt electric start	Standard
Twin alternators	Standard
Electric stop	Standard
Heavy duty rails & flexible feet	Standard
Morse type cable fitting on speed & gear control	Standard
Centaflex flexible drive coupling	Optional
Low noise air silencer & cleaner	Standard
Calorifier connections	Standard
Dry exhaust flange	Standard
Dry exhaust silencer	Optional
Dry Exhaust Hospital Silencer	Optional
Flexible exhaust pipe with heat shield	Optional
Engine oil extraction pump	Standard
Flexible fuel lines to RCD	Standard
Fuel pre filter and water drain	Standard
Standard control panel	Standard
Deluxe control panel	Optional
Deep sump	Standard
350 hour oil change interval	Standard
5 kW 230 V alternator	Optional

Features & Options

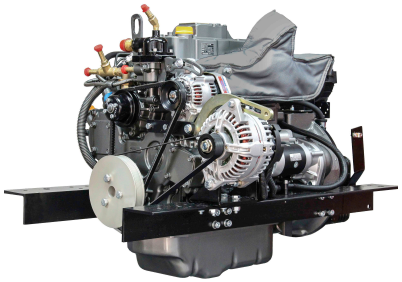

SHIRE 40
40hp @ 2400rpm

Dry manifold

Fuel filter with water drain separator

PRM 150 hydraulic gearbox

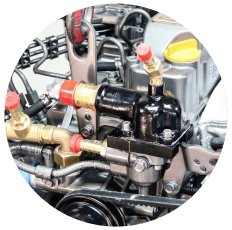

Single thermostat

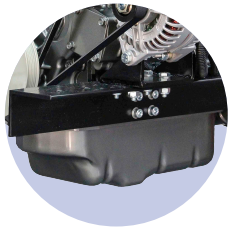

Deep sump

Twin alternators