SHIRE

Scan here to find your local dealer

SHIRE 90

80hp @ 2500rpm

RCDII Emission Compliant

Type	4 stroke water cooled turbo diesel
Number of Cylinders	4
Bore x Stroke	106mm x 127mm
Displacement	4500 cc
Max HP (ISO 3046/1)	80 @ 2500rpm
Peak Torque	201lb ft / 1600rpm
Combustion	Direct Injection
Electrical System	Starting motor D.C. twin 12V 120 amp & 12V 150 amp alternators
Cooling System	Keel or skin tank
Lubrication System	Forced lubrication by trochoid pump
Gearbox	PRM 280 Hydraulic
Reduction Ratio	2:1
Dry Weight (inc gearbox)	525 kg

Power Curves / Fuel Consumption

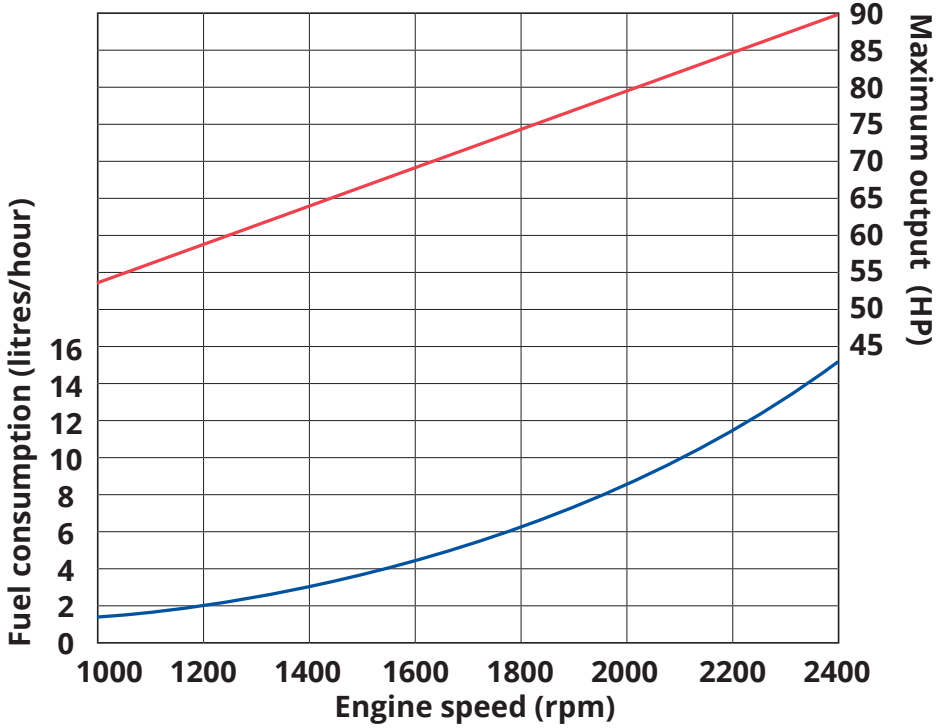

PROUD MEMBER OF BRITISH MARINE LEADING THE INDUSTRY

Specifications and/or prices are subject to change without notice.
Every effort is made to produce sales literature and price lists that are accurate and current.

Shire - Engineered and manufactured in the UK by Barrus
E. P. Barrus Ltd., Glen Way, Launton Road, Bicester, Oxfordshire, OX26 4UR Tel: 01869 363682 www.barrus.co.uk

Powered by BARRUS

Dimensions

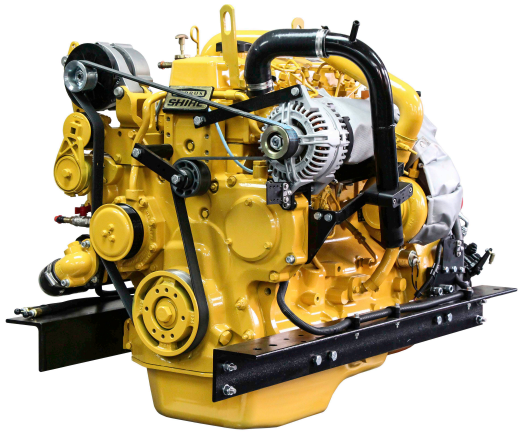

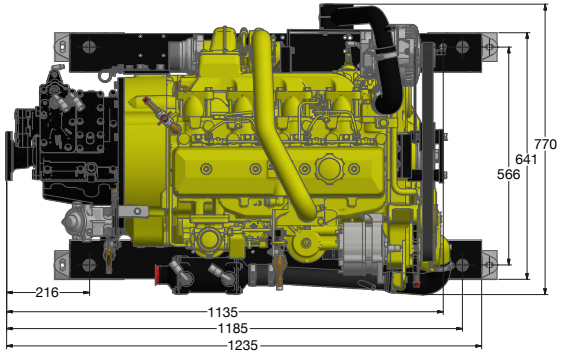

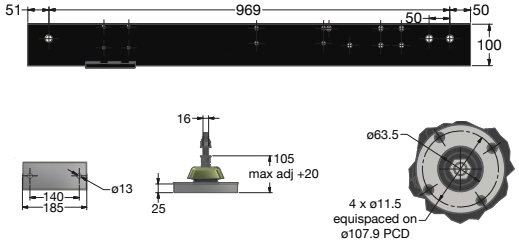

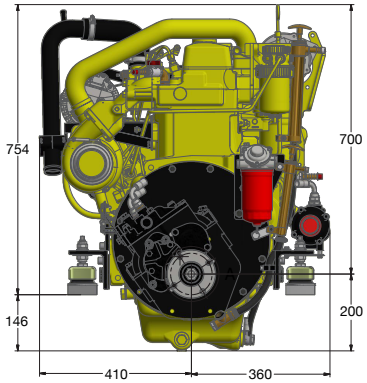

12 volt electric start	Standard
Twin alternators	Standard
Automatic spring loaded belt tensioner	Standard
Electric stop	Standard
Heavy duty rails & flexible feet	Standard
Morse type cable fitting on speed & gear control	Standard
Centaflex flexible drive coupling	Optional
Remote mounted low noise air silencer & cleaner	Standard
Calorifier connections	Standard
Dry exhaust flange	Standard
Dry Exhaust Hospital Silencer	Optional
Flexible exhaust pipe with heat shield	Optional
Engine oil extraction pump	Standard
Gearbox oil extraction pump	Standard
Flexible fuel lines to RCD	Standard
Fuel pre filter and water drain	Standard
Deluxe control panel	Standard
370 hour oil change interval	Standard
Gearbox power take off	Optional

Features & Options

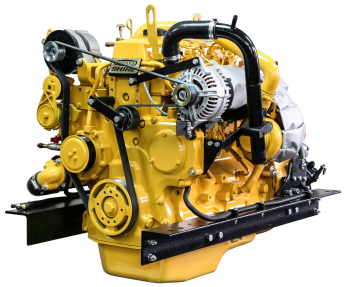

SHIRE 90
80hp @ 2500rpm

Automatic spring loadedbelt tensioner

Lube oil drain pump

Dry manifold

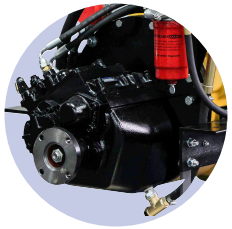

PRM 280 hydraulic gearbox

Deep sump

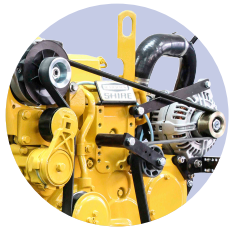

Twin alternators