ORIGINAL INSTRUCTION

ELECTRIC OUTBOARD MOTOR OPERATORS MANUAL

For the following engine models:
6HP
10HP
20HP

RDG603A74 - Issue 8

SAFETY

Barrus is concerned for your safety. We use safety statements throughout the manual to call your attention to the potential hazards associated with the operation of your electric propulsion outboard.

Follow the precautions listed throughout the manual before operation, during operation and during servicing/maintenance procedures for your safety, the safety of others and to protect the performance of your engine.

Safety alert symbols appear throughout the manual. It means attention, be alert as your safety is involved. Please read and follow the message that appears after the safety alert symbol.

NOTICE:	This indicates a situation which can cause damage to the machine, personal property and/or the environment or cause the equipment to operate improperly
CAUTION:	This indicates a hazardous situation which, if not avoided, could result in minor or moderate injury.
WARNING:	This indicates a hazardous situation which, if not avoided, could result in death or serious injury.
DANGER:	This indicates a hazardous situation which, if not avoided, will result in death or serious injury.

Engine Details

Engine Model Number:	

Engine Serial Number:	

Please enter your engine model number and serial number in the space provided above. Please quote the engine identification number during any enquiry or when ordering spare parts. Information about the engine serial number and its location on the engine can be found in **SECTION 2** of the manual.

This manual is for the following engine models:

- EZ-S06T (SHIRE6EZTILLPDI)
- EZ-S06R (SHIRE6EZREMPDI)
- EZ-S10T (SHIRE10EZTILLPDI)
- EZ-S10R (SHIRE10EZREMPDI)
- EZ-S20T (SHIRE20EZTILLPDI)
- EZ-S20R (SHIRE20EDREMPDI)

***Note**: T = Tiller Steer, R = Remote Steer

Description

This range of electric outboards are unique in their design. Using a D.C. brushless, water-cooled 48v electric motor, which is mounted horizontally on top of the outboard leg. Drive is transferred by a heavy-duty toothed belt to the prop shaft. This gives an efficient and trouble-free method of power delivery. The outboard leg has internal waterways built into it through which cooling water (with anti-freeze) is pumped, circulated through the motor, and flows down the inside of the leg, to be cooled by heat transfer. There is no traditional type impeller to wear out or change. Salt, silt, and sand does not enter the motor and, as long as the anti-freeze levels are maintained, there is no danger of frost damage in the winter. This results in your electric outboard requiring far less maintenance than a conventional petrol unit.
They can be tiller or use an inboard shift and steering system, and optional propellers are available. Bluetooth performance monitoring system is used to indicate main parameters.

Engine specifications, Benefits and Optional extras

Specifications:

- 48 Volt electric outboard
- CE Marked
- UKCA Marked
- Water cooled brushless electric motor
- Variable speed
- Adjustable leg length from short to long shaft
- Outboard tilt lock
- Adjustable transom angle position
- Mercury marine compatible prop shaft spline
- Safety lanyard
- Replaceable anode

Benefits:

- Variable speed ranges. Can be locked for commercial and hire boat situations
- Coolant is anti-freeze water mix
- No canal, river or sea water enters the system
- No problems in shallow or dirty water
- No water pump impeller to replace
- Replaceable skeg
- Belt drive – no shaft gears or oil changes required
- Spare props of different sizes readily available
- Motor overload cut out
- Spare parts readily available

Optional extras:

- Lithium Ion Polymer batteries available
- Multiple battery packs can be linked
- Remote shift throttle lever for inboard steering position
- Cable steering system for inboard steering wheel application
- Larger skeg rudder
- Other options not listed here are available

Operators Manual

NOTICE:

THIS MANUAL FORMS AN INTEGRAL PART OF THE OUTBOARD IT ACCOMPANIES, IF A TRANSFER OF TITLE OCCURS, IT MUST ALWAYS BE HANDED OVER TO THE NEW OWNER.

Thank you for purchasing this electric outboard motor from Barrus. This manual has been compiled to help you to operate your outboard and its associated parts with safety and pleasure. Please read it and familiarise yourself with the outboard and its parts before operation.

The information and recommendations given in this manual are based on the latest information available at the time of publication. Barrus reserve the right to change the specification of its products and manuals without prior notice.

Depending upon the equipment specification of the outboard and accessories fitted, there may be discrepancies or differences with the information presented in this handbook. No claims may be pursued in this respect.

Ensure that you read and understand the contents of the manual before attempting to operate the unit.

Should you loan or sell to another user you should pass on this user manual. This will make sure that all other users can continue to use and maintain the outboard motor safely.

Disclaimer: All product, product specifications and data are subject to change without notice to improve reliability, function, design or otherwise. Depending upon the specification of the outboard motor and accessories supplied, there may be discrepancies with the information presented in this owner's manual. No claims may be pursued in this respect.

WARRANTY

This Limited Warranty provides coverage for one (1) year or 500 hours (whichever occurs first) for all commercial applications and two (2) years for leisure customers. This is for mechanical parts and electrical parts from the date of warranty registration. The warranty is for non-serviceable items. The repair or replacement of parts, or the performance of service under this warranty, does not extend the life of this warranty beyond its original expiry date.

To ensure that you have been registered for your warranty, please detach and fill in the form on the back of this manual.
Return it to the address given, or email it to Richard.Cooke@barrus.co.uk
The Warranty will only apply if the following have been carried out and the registration form has been completed and returned to Barrus.

CONDITIONS THAT MUST BE MET IN ORDER TO OBTAIN WARRANTY COVERAGE

Warranty coverage is only available from Barrus or an authorised dealer in the country in which the sale occurred.
Overseas warranty will be on parts only, no labour and only after parts have been returned for inspection.
Routine maintenance outlined in the Owner's Manual must be performed using genuine parts (such as belt tension gauges) in order to maintain warranty coverage. If the customer does not carry out normal maintenance or makes unauthorised alterations or modifications the warranty coverage will become void, Barrus reserves the right to make future warranty coverage possible only with proof of proper maintenance.

WARRANTY CLAIMS

Warranty claims shall be made directly to Barrus or by an authorised dealer.
The dealer will then arrange for the inspection and any necessary repairs. If the repairs carried out are not covered by the warranty, the purchaser shall pay for all related labour and material, and any other expenses associated with that service.

WHAT IS NOT COVERED

This limited warranty does not cover routine maintenance items, adjustments, normal wear and tear, damage caused by abnormal use (such as operating in shallow water), operation of the product in a manner inconsistent with the recommended operation/duty cycle section of the Owner's Manual, accident, submersion, improper installation (proper installation specification and techniques are set forth in the Operations and First time running sections in this manual), use of an accessory or part not manufactured or sold by us, or alteration or removal of parts.

Expenses related to crane-out, launch, towing, storage, telephone, rental, inconvenience, slip fees, insurance coverage, loan payments, loss of time, loss of income, or any other types of accidental or consequential damages are not covered by this warranty.

Index

Page

SECTION 1 – Safety Precautions 11

1. General 11
2. Lifting 11
3. Rotating Parts 11
4. Propeller 12
5. Electrics 12
6. Batteries 12
7. Safety Lanyard 13
8. Motor Overload 14
9. Modifications 14
10. Boat 14
11. Passenger Training 14
12. Terminal Crimping 14
13. Applicable Standards 14

SECTION 2 – Component Identification 15

1. Tiller Control Model 15
2. Tiller Control 15
3. Remote Control Model (Option) 16
4. Speed and Direction Control Lever (Option) 16

SECTION 3 – Installation 17

1. Unpacking the Outboard Motor 17
2. Filling Outboard Motor with Coolant 20
3. Adjusting the Outboard Motor Transom Height 21
4. Mounting of the Outboard Motor 22
5. Adjusting the Outboard Steering Lock 23
6. Adjusting the Outboard Angle 24
7. Battery Selection 24
8. Lithium Ion Polymer (LiFePO4) Batteries 25

9. Battery Features (EB-4830 / EB-4850) 28
10. Lithium Ion Polymer (LiFePO4) Batteries Precautions (EB-4830 / EB-4850) 31
11. Lithium Ion Polymer (LiFePO4) Batteries Warnings (EB-4830 / EB-4850) 31
12. Battery Re-Booting 32
13. Battery Type Selection 32
14. Anderson Type Connectors 32
15. Battery Installation 33
17. Connecting Speed and Direction Control Lever (Option) 34
SECTION 4 – Operation 35
1. General 35
2. Starting Procedure (Outboard Motor with tiller control) 36
3. Starting Procedure (Outboard motor with speed and direction control lever) 37
4. Stopping Procedure (Outboard Motor with tiller control) 38
5. Stopping Procedure (Outboard motor with speed and direction control lever) 38
6. Tilting the Electric Outboard 39
7. Application Downloads and Information 41
SECTION 5 – Maintenance 44
1. General 44
2. Removing propeller 44
3. Installing propeller 45
4. Checking coolant level 45
5. Belt Tension 45
6. Prop Shaft Bearing Replacement 48
7. Anode Selection 49
8. Electric Cooling Pump 49
9. DC-DC Voltage Converter 49
SECTION 6 – Transportation and Storage 50
1. Transporting 50
2. Storage 50
SECTION 7 – Wiring Diagrams 51

1. Wiring Diagram for Electric Propulsion Outboard 51
2. Wiring Diagram for Speed and Direction Control Lever 53
SECTION 8 – Technical Data 54
1. Outboard Data 54
2. Dry Weight of Engine Data 54
3. Shipping Weight and Packaging Dimensions 54
4. Outboard Dimensions 56
SECTION 9 – System Protection Characteristics 59
SECTION 10 – Spare Parts 60
SECTION 11 – Security Products 65
1. STAZO Nutlock 65
2. STAZO Security Chain 65
3. STAZO Bracket Nut 66
4. STAZO Outboard Lock 66
5. Talamex Outboard Motor Lock 67
SECTION 12 – Special Tools 68
SECTION 13 – Afterlife Recycling 71
SECTION 14 – Declarations 72
1. Declaration of Conformity for Recreational Craft Propulsion Engine with the requirements of Directive 2012/53/EU. (CE Marking) 72
2. Declaration of Conformity for Recreational Craft Propulsion Engine with the requirements of the Recreational Craft Regulations 2017 (UKCA Marking) 74
3. LiFEP04 Battery TUV Safety Data Sheet 76

SECTION 1 – Safety Precautions

1. General

NOTICE:

NEVER PERMIT ANYONE TO OPERATE THE OUTBOARD WITHOUT PROPER TRAINING.

Ensure that the engine battery isolator switch is in the off position before connecting the battery, carrying out any maintenance or repairs. Also, when the outboard is not in use.

2. Lifting

DANGER:

CRUSH HAZARD! NEVER STAND UNDER A HOISTED ENGINE. IF THE HOIST MECHANISM FAILS, THE ENGINE WILL FALL ON YOU, CAUSING SERIOUS INJURY OR DEATH.

- Note: Suitable safe lift equipment must be used to lift, move, and mount the outboard onto the boat.
- The batteries used for the outboard will be heavy. Make sure safe lifting procedures or suitable cranes or hoists are used when moving and installing them.

3. Rotating Parts

WARNING:

SEVERE HAZARD! KEEP HANDS AND OTHER BODY PARTS AWAY FROM MOVING/ROTATING PARTS. WEAR TIGHT FITTING CLOTHING AND KEEP YOUR HAIR SHORT OR TIE BACK. REMOVE ALL JEWELLERY BEFORE COMMENCING WORK. CHECK BEFORE STARTING THE OUTBOARD THAT ANY TOOLS OR RAGS USED DURING MAINTENANCE HAVE BEEN REMOVED FROM THE AREA.

The outboard and its accessories are not intended to be put into operation until they are integrated into the boat as a whole. The top cowl must always be fitted whilst the motor is running.

4. Propeller

CAUTION

- The propeller has sharp edges which can cause injury even when it is stationary. If there is someone in the water near the motor, it must be switched off.
- If the propeller is damaged, it may become unbalanced and cause either bad vibrations or the outboard to fail. Do not use the outboard in this situation.

5. Electrics

CAUTION

- Do not touch any electrical parts while operating the motor. The electrical parts may cause shock or electrocution.
- Ensure all electrical connections are insulated against accidental short circuit.

6. Batteries

DANGER:

EXPLOSION HAZARD! NEVER SHORT OUT THE BATTERY TERMINALS, INCLUDING WHEN CHECKING THE REMAINING BATTERY CHARGE THIS WILL RESULT IN A SPARK AND MAY CAUSE AN EXPLOSION OR FIRE.

WARNING:

BURN HAZARD! BATTERIES CONTAIN SULPHURIC ACID. NEVER ALLOW BATTERY FLUID TO COME IN CONTACT WITH SKIN, EYES OR CLOTHING. SEVERE BURNS COULD RESULT. MAKE SURE THE CORRECT PERSONAL PROTECTION EQUIPMENT IS WORN.

- Batteries can produce explosive gases; keep sparks and flames away from the battery.

NO SMOKING

- Lead acid batteries contain sulphuric acid; if splashed on skin or eyes, flush well with water and seek medical advice.
- Keep battery tops and battery compartment ventilated at all times.
- If disconnecting the battery; remove the earth lead **FIRST**; and re-connect it last.
- If charging the battery; ensure that the charger is switched off before connecting and disconnecting.
- Do not tip the battery on its side.
- Please see label on battery or manufacturer's instructions for specific information.
- A battery master (on/off) switch must be installed in the system.

7. Safety Lanyard

WARNING:

- The magnetic safety lanyard tag should always be attached to the stop switch area on the outboard tiller or remote shifter and the person operating the boat before the motor is started. This will prevent the outboard from operating if the operator falls overboard or leaves the helm.

Figure 1: Safety Lanyard

The outboard will not operate if the safety lanyard is not in place. Ensure there is a spare one on board the boat and that passengers know where it is located.

8. Motor Overload

- If the motor is excessively overloaded (by either extended running at high speed or using a propeller which is too big for the application) the motor will stop.
- If the motor stops all drive will be lost, which may be hazardous.
- If the motor stops, move the speed control lever to the stop position. Slowly move the speed control to the drive position which will start the motor again.
- Continue at a reduced speed until the initial cause of the overload has been resolved.

9. Modifications

Do not attempt to modify the outboard motor as this is likely to reduce safety and reliability. Any modifications will mean that the outboard will not be liable for warranty and maybe illegal to use.

10. Boat

- Ensure the boat, that the outboard motor is being fitted to, has the capability of accommodating the power and weight of the unit. (including the batteries).
- Ensure that any requirements of the boat manufacturer are adhered to.
- Consider location of the batteries in regard to weight distribution within the boat.

11. Passenger Training

- Ensure that at least one Passenger is trained to operate the boat in the event of an emergency.

12. Terminal Crimping

Ensure that a professional type crimping tool is used for crimping all heavy-duty cable connections. Failure to do so can result in poor performance, system failure, terminal overheating or in some cases melting of plastic terminal plugs or even fires.

13. Applicable Standards

Ensure that the fitting and installation of the electric outboard motor, batteries, battery storage, cables and control systems comply with all relevant local, national, and international standards.

SECTION 2 – Component Identification

1. Tiller Control Model

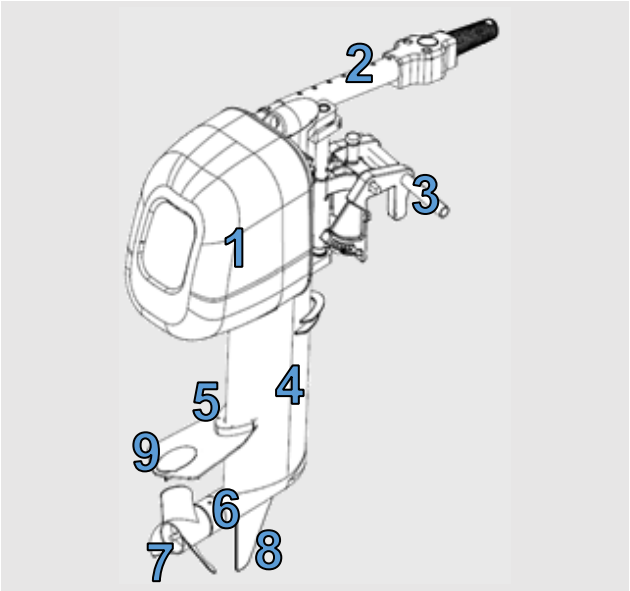

Figure 2: Tiller Controlled Outboard

	Description*
1	Engine Cowl
2	Tiller Control
3	Transom Mounting Bracket
4	Leg
5	Anti-Cavitation Plate
6	Prop Shaft Casing
7	Propeller
8	Skeg
9	Anode

2. Tiller Control

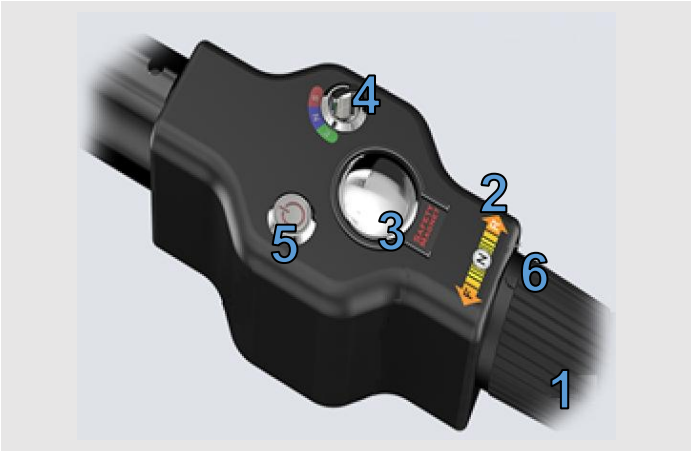

Figure 3: Tiller Control

	Description*
1	Speed Control Twist Grip
2	Direction Display
3	Safety Lanyard
4	Mode Switch
5	On/Off Power Button
6	Neutral Position Indicator

Note: A number of optional extras may be fitted to the engines, that are not shown here.
Note: The serial number can be found on the back of the motor.
Note: The On/Off Power Button is illuminated green when it is in the on position.

3. Remote Control Model (Option)

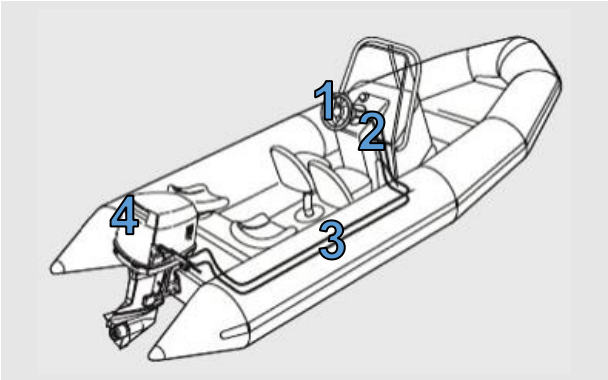

Figure 4: Remote Controlled Outboard

	Description*
1	Steering Wheel
2	Speed and Direction Control Lever
3	Steering Cable
4	Electric Outboard

Note: A number of optional extras may be fitted to the engines, that are not shown here.

4. Speed and Direction Control Lever (Option)

Figure 5: Control Lever

	Description*
1	Safety Lock Button
2	Control Grip
3	Connecting Cable
4	Safety Lanyard
5	Mode Switch
6	On/Off Power Button
7	Extension Lead Connecting Plug
8	Extension Cable (3.1 Metres)

Figure 6: Extension Cable

SECTION 3 – Installation

NOTICE:

REFER TO THE BARRUS MANUAL PRIOR TO INSTALLING THE ENGINE.

1. Unpacking the Outboard Motor

- The outboard motor will arrive in a wooden box. Section 8.3 details shipping weight and packaging dimensions. Use suitable personal protective equipment for unboxing.

Figure 7: How the outboard motor will arrive

- Stand the box upright as shown in **Figure 7**.
- Use a screwdriver to open the wooden box carefully. Don't damage the wooden box.
- Make sure to remove all screws or staples from the box.
- Using a crane, two people will be required to remove the engine from the box.

Figure 8: Opening the wooden box

- Check to make sure the following parts are in the box:

    1. Outboard Motor
    2. Anderson Type Cable Connector (Qty 1)
    3. Safety Lanyard
    4. Transom Mounting Bolts and Tools
    5. Speed and Direction Control Lever and Steering Kit (Remote Steering Only)

Figure 9: Items in the wooden box

Note: The outboard does not arrive as pictured above. Some assembly is required, such as fitting of the propeller and skeg. Propeller fitting instructions can be found on pages 45 and 46.

Note: There is a right-handed speed and direction control lever available at an additional cost.

- For remote steering/control application, the steering kit should contain:
    1. Square Rubber bung
    2. Steering Arm
    3. Locking Spacer
    4. Grub Screw
    5. Steering Arm Left
    6. Threaded Adjuster

7. M12 Nuts
8. Steering Arm Right
9. Washers (2 Sizes)
10. R- Clips
11. Steering extension
12. Steering Spacer
13. Steering Arm Bracket
14. Shifter Mounting Bracket

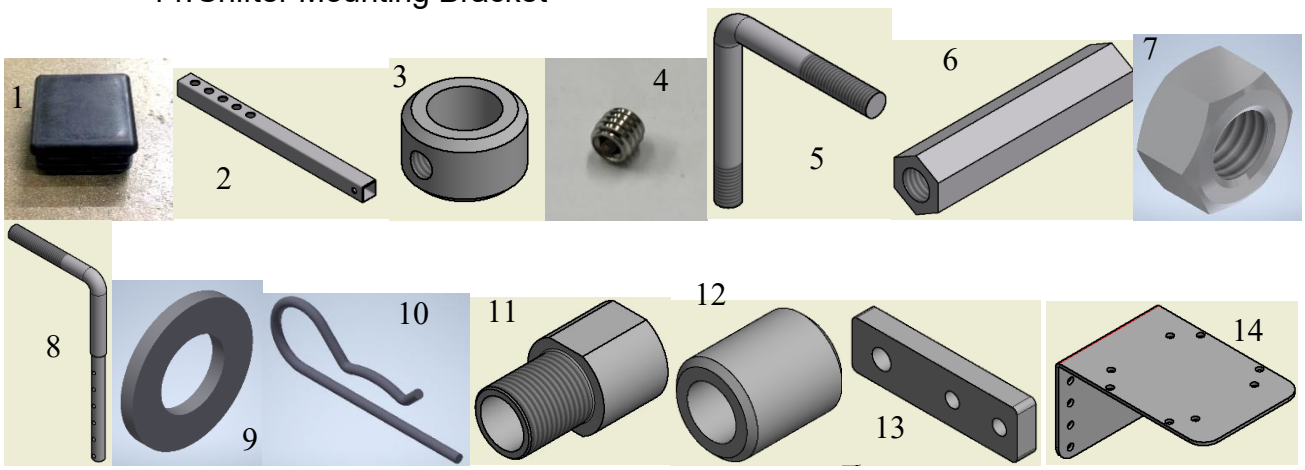

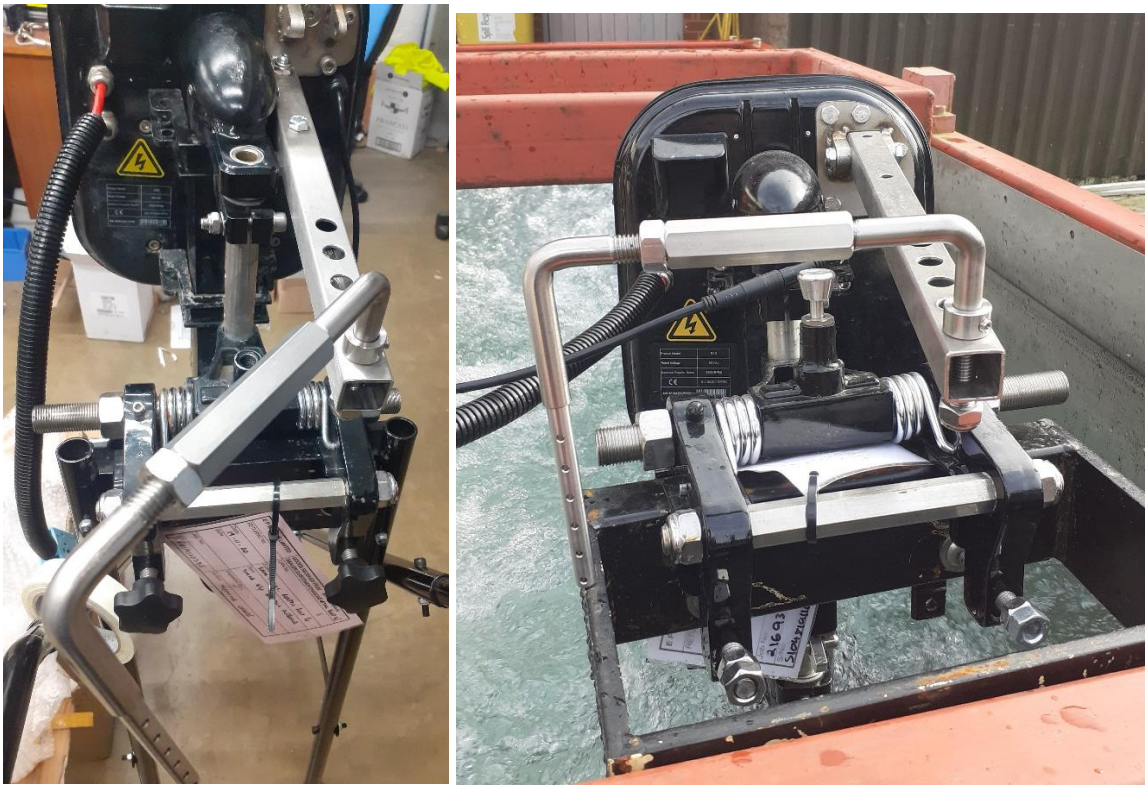

Figures 10 & 11: Rigid Steering Set up (Left) and Flexy Steering Set up (Right)

- The steering kit can be attached to the motor in two different ways, depending on the rigidity required from the system.
- The rigid set up (**Figure 10**) uses parts 12 and 13 in the steering kit list and attaches to the motor in two places.
- The flexy set up (**Figure 11**) uses the existing steering bracket that is also used for the tiller control.

2. Filling Outboard Motor with Coolant

- Ensure the propeller is not fitted.
- Remove the engine cowl from the outboard motor. (**Figure 2**)
- Remove the coolant cap from the outboard motor. (**Figure 12**)
- Switch the outboard on, using the on/off switch (**Figure 3**, button 5) the button will then be illuminated green, this starts the pump, then immediately begin filling with coolant.
- Fill the coolant tank with standard high-quality antifreeze and clean water at 50:50 mix ratio.

Ensure the motor is in the neutral position. Do not engage forward or reverse.

- After one minute switch off the power then add coolant again.
- Switch on the power again to allow the pump to circulate the coolant.
- These stages may need to be repeated multiple times to ensure the tank is full, and all air is removed.

Ensure the coolant tank is full before operating the outboard.

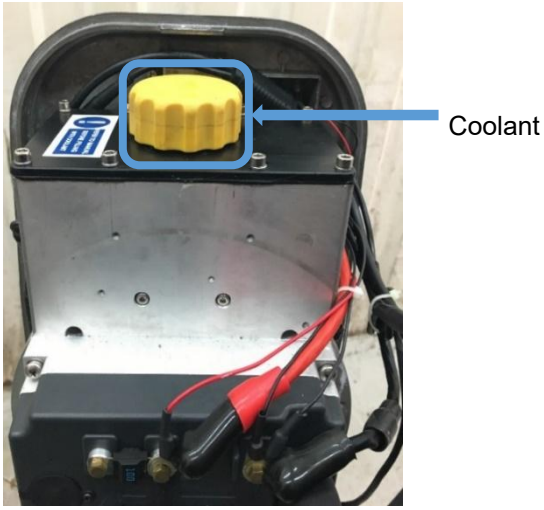

Figure 12: Coolant Cap

- Refit the coolant cap to the outboard motor, making sure it is fully tightened.

***Note**: The S06 takes approximately 1.75 litres of antifreeze-water mix to fill, whereas the approximate amounts for the S10 and S20 are 2 and 2.1 litres respectively.

3. Adjusting the Outboard Motor Transom Height

***Note**: The outboard has an adjustable transom height system, there are a number of positions to choose from between short and long shaft.

- Prior to fitting the outboard motor make sure the correct transom height is chosen for the hull of the vessel. (see 4. Mounting of the Outboard Motor).
- To adjust the transom height, remove the bolt on the shaft (see **Figure 13**). Select the correct hole on the shaft which will give you the correct transom position. Refit the bolt and tighten the nut and bolts securely.

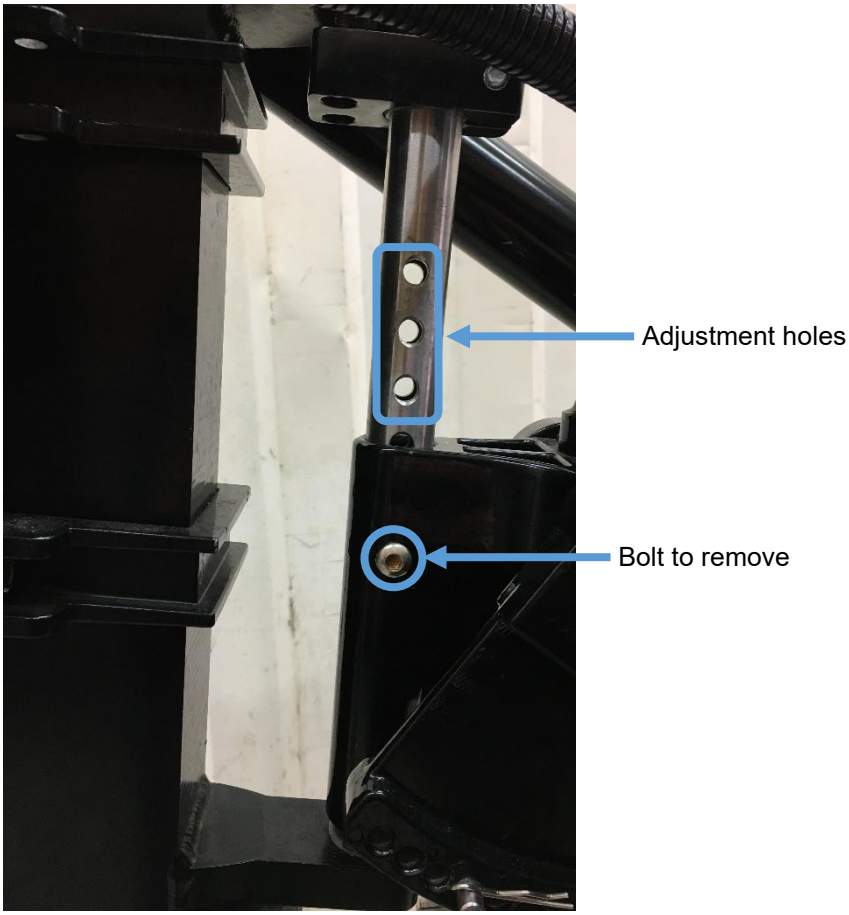

Figure 13: Adjusting the transom height

4. Mounting of the Outboard Motor

- The outboard needs to be mounted so that the boat is balanced. For single-engine boats mount the outboard motor on the centre line (keel line) of the boat.

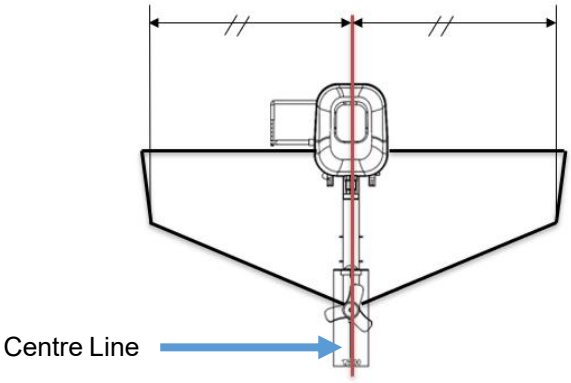

Figure 14: Centre Line (Keel Line)

- Mount the outboard motor ensuring the anti-cavitation plate is 25mm (1”) below the bottom of the boat.

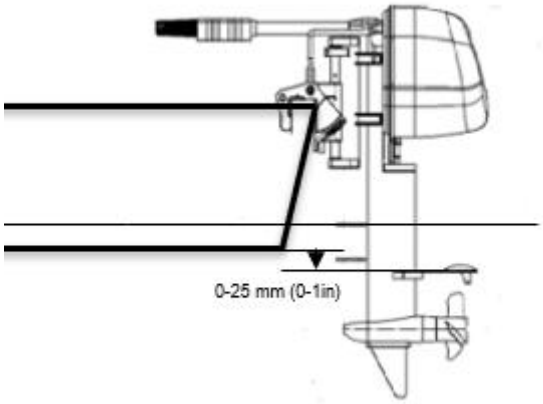

Figure 15: Mounting Height

It is important that the outboard is installed at the correct height. If it is mounted too high, air will enter the propeller area and cause cavitation. This will cause loss of drive, noisy operation and loss of maximum potential speed. If it is mounted too low, it will cause excessive drag in the water, using more power. In shallow water it may become restricted and hit the bottom causing damage to underwater components. Water may enter the cowl, especially when going in astern, and potentially damage the electrical system.

- Fit the outboard to the boat, securing with the thumb screws on the transom.
- Holes are provided to drill through and enable additional bolts (which must be fitted) to secure the outboard to the transom.

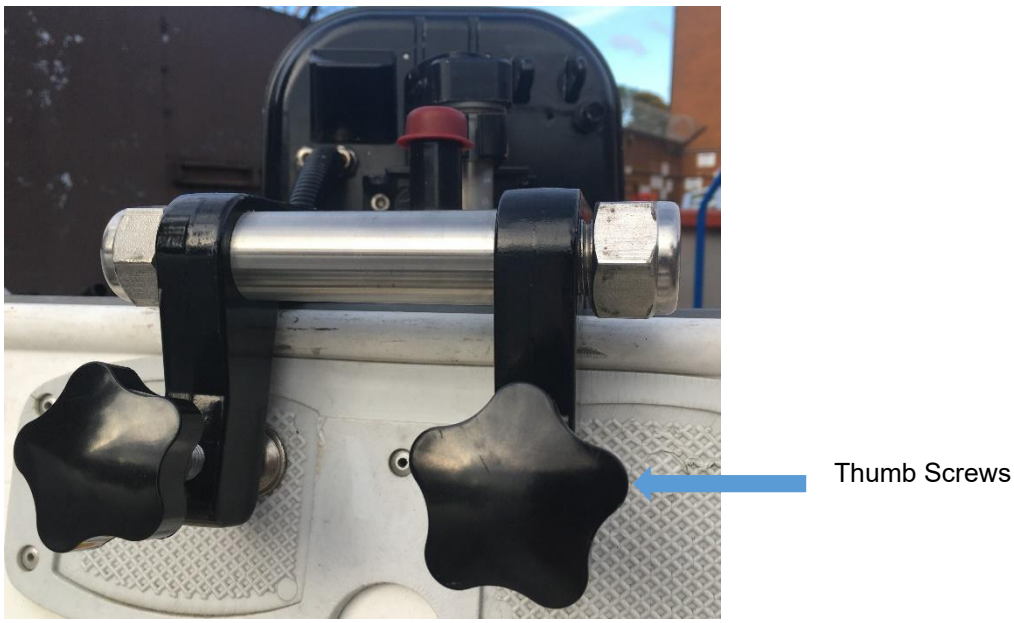

Figure 16: Fitting outboard to boat

5. Adjusting the Outboard Steering Lock

- The outboard steering sensitivity can be adjusted by tightening or loosening the steering lock bolt.
- The outboard will arrive with the bolt fully tightened, to maintain stability during transport and initial assembly.

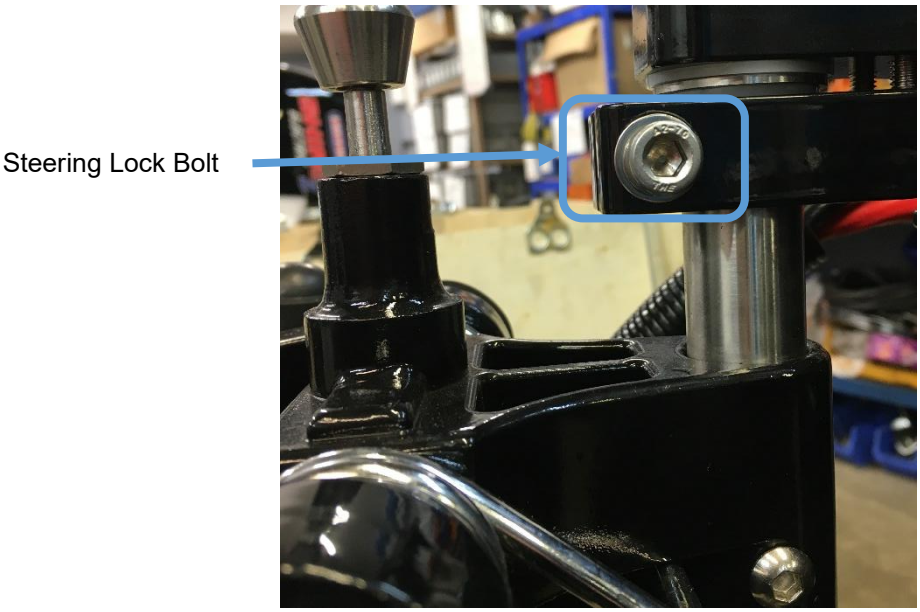

Figure 17: Steering Lock Bolt

6. Adjusting the Outboard Angle

- This is much easier to do before the boat is put into the water.
- Remove the R clip from the locking pin.
- Remove the locking pin from the transom bracket and adjust the outboard motor to the required angle.
- Refit the locking pin and R clip.

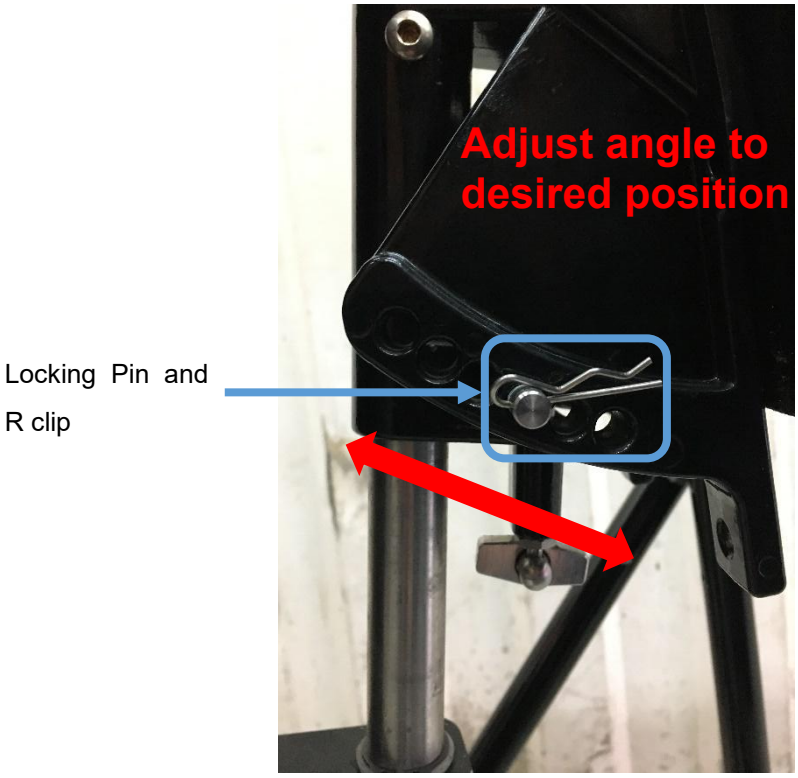

Figure 18: Adjusting angle of the outboard

7. Battery Selection

- There are many types of battery available that can be used with this range of electric outboards. It should be noted that they should be deep cycle traction and of the correct voltage (48 Volts).
- The outboards will be set up to work with lithium-ion polymer batteries, however the settings can be changed to better suit lead acid batteries, lead carbon, gel type, or similar. The lower the cut off voltage for the batteries, the more likely they are to get damaged.

Care should be taken when switching from lead acid to lithium-ion polymer batteries, as the settings of the controller may need to be re-programmed. Such programming can only be carried out by an authorised dealer, using a computer.

- The size of the battery bank required to power the outboard motor will depend on the current draw you plan to regularly place upon it and the distance you plan to travel. It is difficult to determine the current draw until the outboard motor is used as each boat has a different hull shape, length, displacement, speed, and daily operating cycle requirement. Battery modules can be easily connected in parallel to form a larger capacity battery bank.

If using batteries from other manufacturers or sources, these may be either 12v or 24v. The batteries must be connected in such a way as to give 48v.

Always use Blue Anderson type connector plugs for 48 Volt batteries and connecting cables to avoid potential injury and/or damage to the battery and outboard.

Note: Different coloured Anderson type connectors are used for different voltages to avoid connecting batteries of the incorrect voltages.

8. Lithium Ion Polymer (LiFePO4) Batteries

- These batteries are considered safer than conventional Lithium Ion batteries
- Barrus offers a number of options

EB-4830 – Single 48V 30Ah and 48V 50Ah (Amp Hour) Battery

- This comes with its own charger; it is fitted with a suitable quick connect plug for this purpose.
- Normal charge time using the standard charger is about 6 hours.
- The battery has a useful gauge on the top which, by pressing the desired button, can display:
    - Voltage

Figure 19: Voltage Display

- Current Draw

Figure 20: Amps Display

- Amp Hours

Figure 21: Amp Hours Display

- Battery Percentage

Figure 22: Battery Percentage Display

- The battery percentage display acts in a similar way to a fuel gauge, with 100% being full (fully charged) and 0% being empty (discharged).

Single 48V 30Ah (Amp Hour) and Single 48V 50Ah Battery Specification

	48V/ 30Ah (EB4830)	48V/ 50Ah (EB4850)
Weight	16kg	25.5kg
Nominal Voltage	48v	48v
Charge cut-off voltage	58 ± 0.5v	58v ± 0.5v
Normal charger current	5 Amps	8 Amps
Normal charge time	6 Hours	6 Hours
Max charge current	3 Amps	25 Amps
Fast charger time (Optional extra)	1 Hour	2.5 Hours
Normal discharge current	30 Amps	80 Amps
Max discharge current	80 Amps*	130 Amps*
Over discharge protection current	90 Amps	150 Amps
Working temperature charging	0°C to 40°C	0°C to 45°C
Working temperature discharging	-10°C to 60°C	-10°C to 60°C
Storage temperature	0°C to 40°C	-10°C to 40°C
Maximum storage period without charging	1 Year	1 Year
Maximum operating cycles	1000	1000

***Maximum discharge should be used for emergencies only. Prolonged running above the normal discharge rate can cause the battery to trip out and will cause long term damage.**

Note: 1000 cycles is the number of cycles that the battery should operate at full output. After this time, the battery will continue to work but will gradually give less output/duration.

Note: Batteries that are not so deeply discharged will have a longer life than those that are fully discharged.

A suitably sized battery bank should be specified to prevent damage to either the battery or motor. For example, the S10 motor, which has a maximum input current of 135A, should not be run using only one EB4850 battery.

- Connect the battery to the outboard harness as per **Figure 23**.

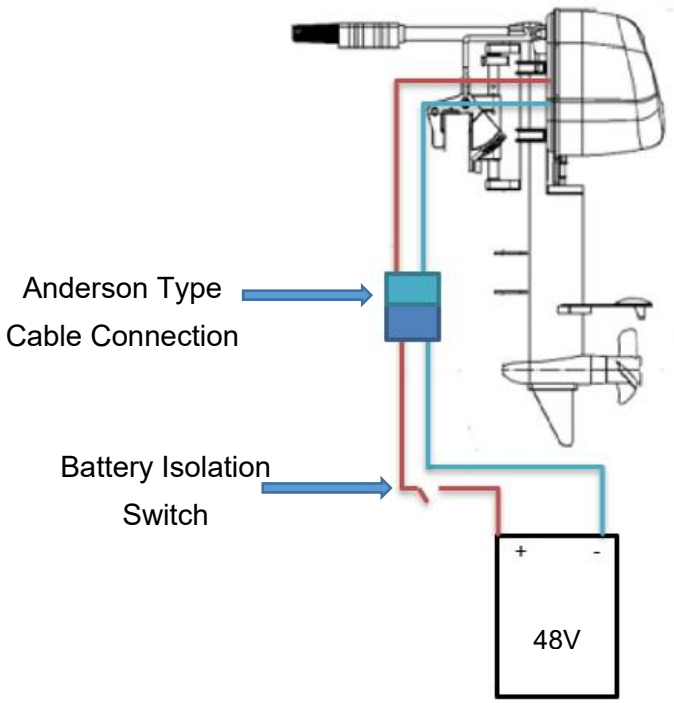

Figure 23: Battery Connections

- The outboard motor voltage is 48v (one EB-4830 or one EB-4850 Lithium Ion battery).
- The table below shows the minimum battery and equipment specification required for the different outboard motor models.
- To stop safety risks, capacity losses and contact point losses, only the same type of batteries (same manufacturer, same capacity, same age, and same charge condition) should be used together.

Model	Minimum Cable Size	Minimum Battery Isolation Switch Specification
6hp / 10hp Outboard	25mm²	300A 48V
20hp Outboard	35mm²	600A 48V

Differences in the charge condition of batteries wired in series can cause high compensatory currents or overloads which can damage the cables, connectors, or battery. In extreme situations this can cause fires and injuries.

9. Battery Features (EB-4830 / EB-4850)

Battery Management System (Built into the battery structure)

- This prevents damage by over-charging and over-discharging. Also, in the case of a short circuit.

- If any of these situations occur, the battery will simply cut out. The display will disappear. If the battery is reconnected to the charger, plugged into the mains supply and switched on, it will re-boot the battery and turn it back on again.

Multi-Plug Connector

- A full-size multi plug with a short cable is available to allow for quick connect or disconnect. As many as four batteries can be connected to the engine at the same time using the connector. (**Figure 24**)
- If two or more 48v batteries are connected together in parallel, it is not a problem, they will equalise the charge whilst in use.

Note: 48V batteries only to be used with the multi-plug connector.

- If two or more batteries are charged together, they can be connected and either all be charged with a charger each or one charger for all of the batteries, but at a slower rate.

Figure 24: Multi-Plug Connector

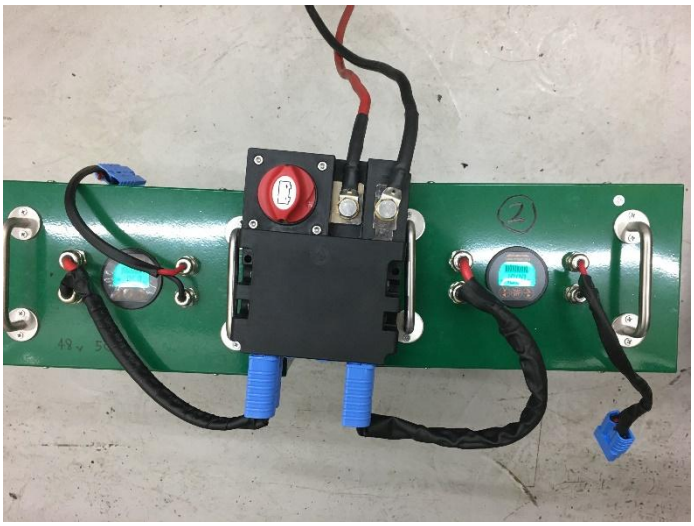

Figure 25: Two batteries connected in parallel with the Multi-Plug Connector

- Alternatively, the outboard motor can be powered by suitable deep cycle traction batteries, sourced by the customer.
- The table below shows the minimum battery and equipment specification required for the different outboard motor models.

Model	Minimum Cable Size	Minimum Battery Specification	Minimum Battery Isolation Switch Specification
6hp / 10hp Outboard	25mm²	Qty 4 x 12V 85Ah Deep Cycle Absorbent Glass Mat (AGM) Traction Battery (Wired in series)	300A 48V
20hp Outboard	35mm²	Qty 4 x 12V 105Ah Deep Cycle AGM Traction Battery (Wired in series)	600A 48V

- To stop safety risks, capacity losses and contact point losses, only the same type of batteries (same manufacturer, same capacity, same age, and same charge condition) should be used together.

Differences in the charge condition of batteries wired in series can cause high compensatory currents or overloads which can damage the cables, connectors or battery. In extreme situations this can cause fires and injuries.

- The table below shows an example of how long the outboard motor can be used in a specific application before the batteries will require charging.
- Please note that boat sizes, hull shapes and battery sizes will give different results. This means longer travel times can be achieved, depending on the application. The following values are based on a 16ft Cabin Cruiser.

Model	Battery Supply	Battery Capacity Available	Speed	Battery Usage Time
EZ-S10T/R	8 x 12V 65Ah Deep Cycle AGM Traction Battery	130Ah at 48V	2.2 knots (2.5mph)	5 hours
			3.2 knots (3.7mph)	3 hours 20 mins
			4.2 knots (4.8mph)	1 hour

- The table below shows the average charging time for the batteries when they have been discharged.

Battery Supply	Battery Charging Time (Hours)
4 x 12V 85Ah Deep Cycle AGM Traction Battery	4
4 x 12V 105Ah Deep Cycle AGM Traction Battery	6

10. Lithium Ion Polymer (LiFePO4) Batteries Precautions (EB-4830 / EB-4850)

- Do not store or use the battery at high temperature, this prevents overheating.
- Do not use the battery in areas with a strong magnetic field or static electricity.
- Should the battery leak, and electrolyte gets into your eyes, do not rub them. Instead rinse your eyes with clean water and seek medical attention immediately.
- If the battery secretes an odour, generates excessive heat, or becomes discoloured or deformed at any time, remove it from the device or battery charger and stop using it.
- If the battery terminals become dirty, clean with a dry cloth before use. This prevents potential loss in efficiency due to poor connections.
- Discarded batteries may cause fire or explosions: tape the battery terminals to insulate them. (Dispose of batteries according to approved regulations)

11. Lithium Ion Polymer (LiFePO4) Batteries Warnings (EB-4830 / EB-4850)

- Do not immerse the battery in water and keep the battery in a cool dry environment.
- Do not leave the battery near a heat source.
- Use the correct charger for the battery.
- Do not reverse the positive and negative terminals.
- Do not connect the battery directly to a mains power electrical outlet.
- Do not connect the positive and negative terminals to metal objects, this will cause the battery to short-circuit.

- Take care when transporting the battery, ensuring not to store it with metal objects.
- Do not directly solder the battery or remove the protective casing.
- Dispose of batteries according to approved regulations.

12. Battery Re-Booting

- If the battery is stored for a long period of time it may switch off internally. Or if the battery is over discharged it will trip out and switch off.
- To restart the battery, connect the battery to the battery charger. This should then cause the battery to re-boot and turn on again.

13. Battery Type Selection

- Customers may source suitable batteries locally. Please ensure that the battery manufacturer's instructions are followed and adhered to.
- Optional battery types are available for use with these motors.
- Ensure all of the instructions and precautions are followed when using these batteries.

14. Anderson Type Connectors

- The cables for the batteries and the electric outboard are connected using Anderson type connectors (**Figure 26**).

Figure 26: Anderson Type Connector

- The table below shows the specification of the Anderson type connector (S06 and S10)

	S06 / S10	S20
UL Current Rating (Amperes)	175	350
UL Voltage Ratings (Volts)	600	600
AVG Contact Resistance (micro-ohms)	100	50
Flammability Rating of Housing Material	UL94 V-0	UL94 V-0

- The Part numbers for the Anderson type connectors are RDG206A48 (S06 and S10) and RDG206A52 (S20) (See Section 10 – Spare Parts)

***Note**: See Section 1 – 12 safety precautions referring to terminal crimping.

15. Battery Installation

- Ensure the batteries are stored in a well-ventilated compartment, that complies with the requirements of the R.C.D (recreational craft directive) or other appropriate regulations.
- They must be covered to prevent damage and accidental short circuit of the cells, connections, and batteries.
- Batteries must be clamped down to prevent them from moving.
- Suitable connections must be used, the correct type of cable for the current carrying capacity, insulation properties and be of the flexible type.
- Every system must have a suitable battery master switch and main fuse to turn off and isolate the electrical system in the event of an emergency or when the boat is not in use. The switch for this must be readily accessible.
- The system also has a fuse (Circled on **Figure 27**) mounted on the main power inlet cable on the outboard.

Figure 27: Fuse Position on a S10 Engine

16. Battery Storage

All batteries should be stored in a warm/ dry environment, fully charged and isolated from the electric outboard.

17. Connecting Speed and Direction Control Lever (Option)

- The outboards are available either as tiller operation or as an inboard with remote shift/control. These either come as standard or can be fitted as an option.
- The plug on the Control Lever is connected to the plug on the outboard motor (**Figure 28**).

When the Speed and Direction Control Level is connected to the outboard the Tiller Control will <u>NOT</u> operate.

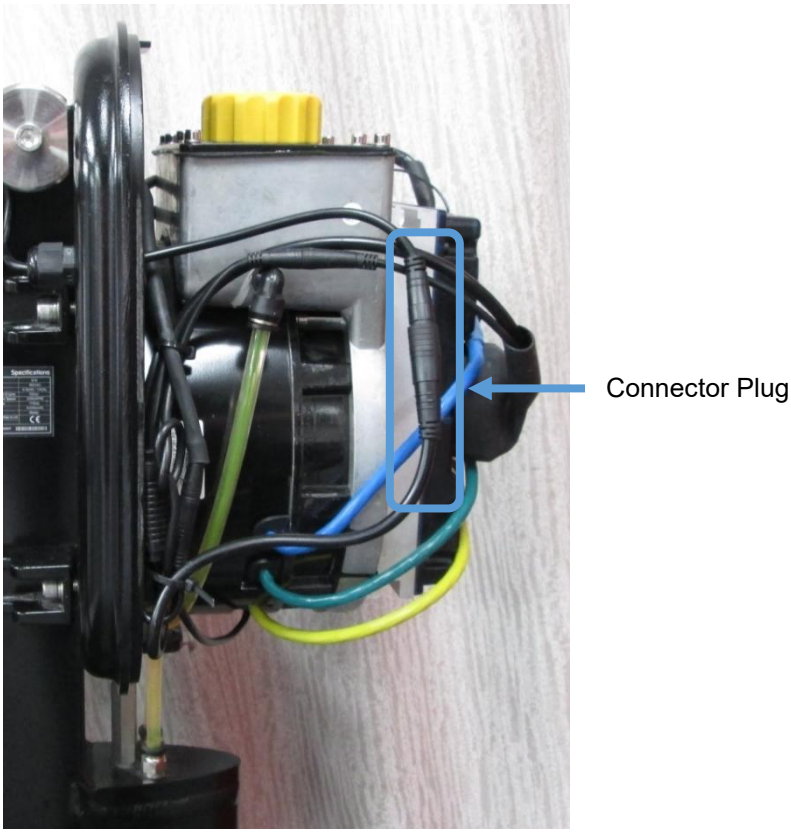

Figure 28: Control Lever connected to Outboard Motor

SECTION 4 – Operation

NOTICE:

REFER TO THE BARRUS MANUAL PRIOR TO OPERATING THE ENGINE.

NOTICE:

THE OUTBOARD MOTOR WILL REQUIRE COOLANT BEING ADDED PRIOR TO BEING USED FOR THE FIRST TIME. PLEASE REFER TO: **SECTION 3 – Installation**

1. General

- Familiarize yourself with the electric outboard controls. For example, you must be able to stop the electric outboard quickly if required, or in an emergency.
- The electric outboard should only be operated by adults who have been instructed on how to operate the outboard and have read this manual.
- Follow the boat manufacturer's instructions on the acceptable outboard maximum weight and power output for the boat. Don't exceed the capacity limits.
- Stop the electric outboard immediately if someone falls overboard.
- Do not submerge the electric outboard motor, controller or other electrical items in water.
- Only run the electric outboard when the propeller is under water. If the outboard is run in the air, the shaft sealant rings (for sealing the motor to the drive shaft) can be damaged.
- When the electric outboard is mounted, the tiller electronics are splash proof only. The tiller and shaft head are not designed to be submerged as this can damage the electronics beyond repair.
- After use, turn off the connection between the motor and the battery using the main battery isolation switch. This completely cuts the power supply to the electric outboard which will help prevent the batteries from discharging when the outboard is not in use.
- For manoeuvring in close to shore or pontoon the three-mode switch should be in the E (economical) position to ensure slow and steady control of the outboard.
- Do not operate in shallow water or component damage will occur.

2. Starting Procedure (Outboard Motor with tiller control)

- Attach the magnetic safety lanyard to the tiller arm of the outboard (**Figure 29**).

Figure 29: Safety Lanyard attached to the stop switch

- Attach the other end of the safety lanyard to the operator's life jacket or leg.

The outboard will not operate if the safety lanyard is not attached.

- Make sure the speed control twist grip is in the neutral position.
- Select the mode you want to use (Sport, Normal or Economic) on the mode switch
  Note: The outboard has 3 modes (Sport (S), Normal (N) and Eco (E)), which have different speeds that are a percentage of the maximum throttle. The default settings are: Economic 25%, Normal 60% and Sport 100%. These can be altered using the EZ Outboard Application (See 7. Application Downloads and Information).
- Check that the speed control twist grip is in the neutral position ('N').
- Press the power button. The light on the power button will illuminate green and the cooling pump will switch on.
- Slowly twist the speed control twist grip to start the outboard in the direction required (Turn anti-clockwise for forward ('F') and clockwise for reverse ('R')).
- To increase the speed, twist the speed control twist grip further.

3. Starting Procedure (Outboard motor with speed and direction control lever)

- Ensure that the lever is in the neutral position.
- Attach the safety lanyard to the control lever connected to the outboard (**Figure 30**).

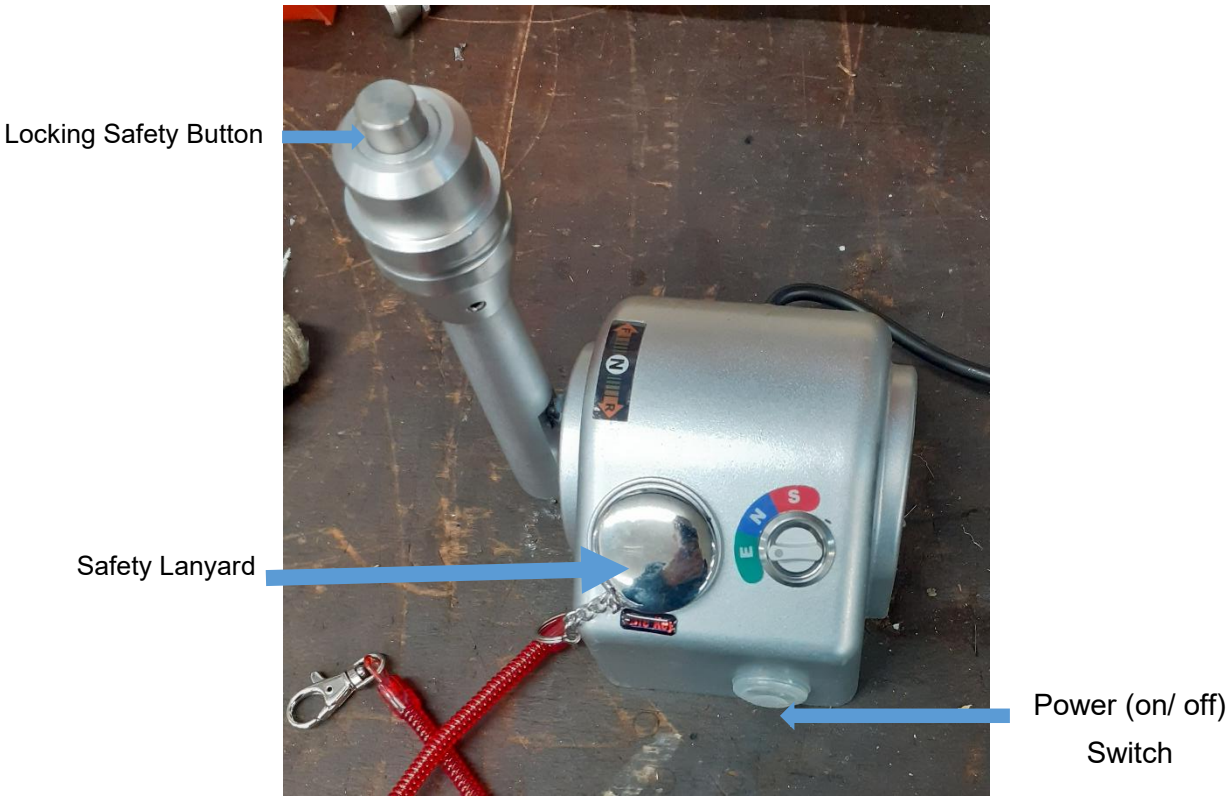

Figure 30: Safety Lanyard attached to control lever

- Attach the other end of the safety lanyard to the operator's life jacket or leg.

The outboard will not operate if the safety lanyard is not mounted in its correct location.

***Note:** The lever must be installed to move the boat forwards when the lever is moved forward.

- Press the power button. The light on the button will illuminate green and the cooling pump will switch on.
- Press the locking safety button on top of the lever down.
- Slowly push the speed and direction control lever in the direction required (forwards or backwards) to start the outboard.
- To increase the speed, move the speed and direction control lever further forwards.

Figure 31: Speed and Direction Control Lever in forward position

4. Stopping Procedure (Outboard Motor with tiller control)

- Put the speed of the motor to the neutral position using the speed control twist grip. This will stop the propeller.
- Press the power button. The light on the button will go off and the cooling pump will stop.

5. Stopping Procedure (Outboard motor with speed and direction control lever)

- Put the speed of the motor to the neutral position using the control lever. This will stop the propeller.
- Press the power button. The light on the button will go off and the cooling pump will stop.

6. Tilting the Electric Outboard

To put the electric outboard in the raised position:

Ensure the motor is stopped and the battery disconnected.

- Unlock the lower tilt lock mechanism by pulling the handle down and rotating 90˚ to sit as shown in **Figure 32**.

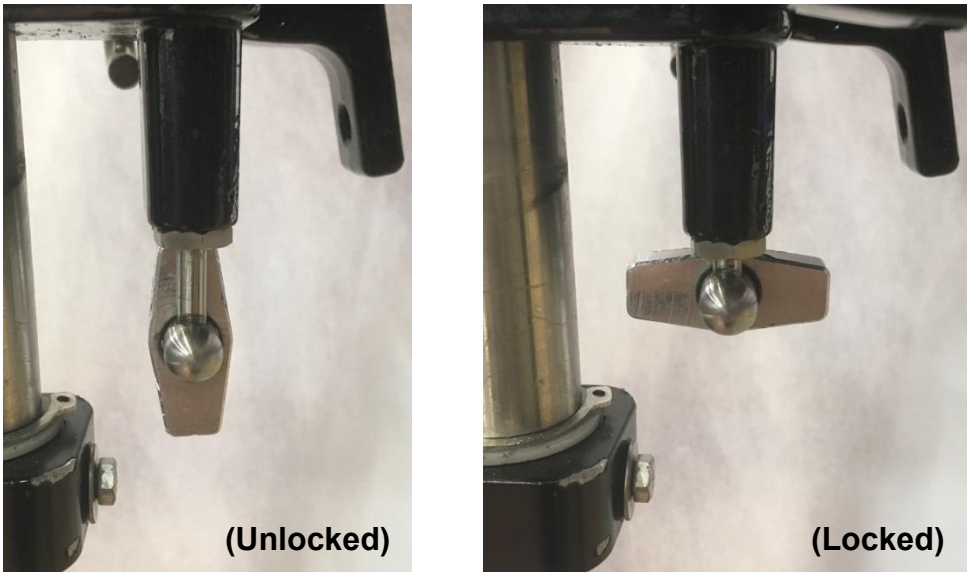

Figure 32: Tilt Lock Lever

- Lift and tilt the electric outboard up. Lift and tilt the outboard until the lift latch engages and this will hold the leg in the raised position. (**Figure 34**)

To adjust the trim angle:

- When the electric outboard is in the raised position, remove the R clip from the trim pin.

Figure 33: Trim R Clip and Pin

- Reposition the trim pin in the selected position and replace the R clip.

To put the electric outboard in the down position:

- Tilt the leg slightly up and lift the release lever up (circled, **Figure 34**). Slowly, tilt the engine down and release the lever.

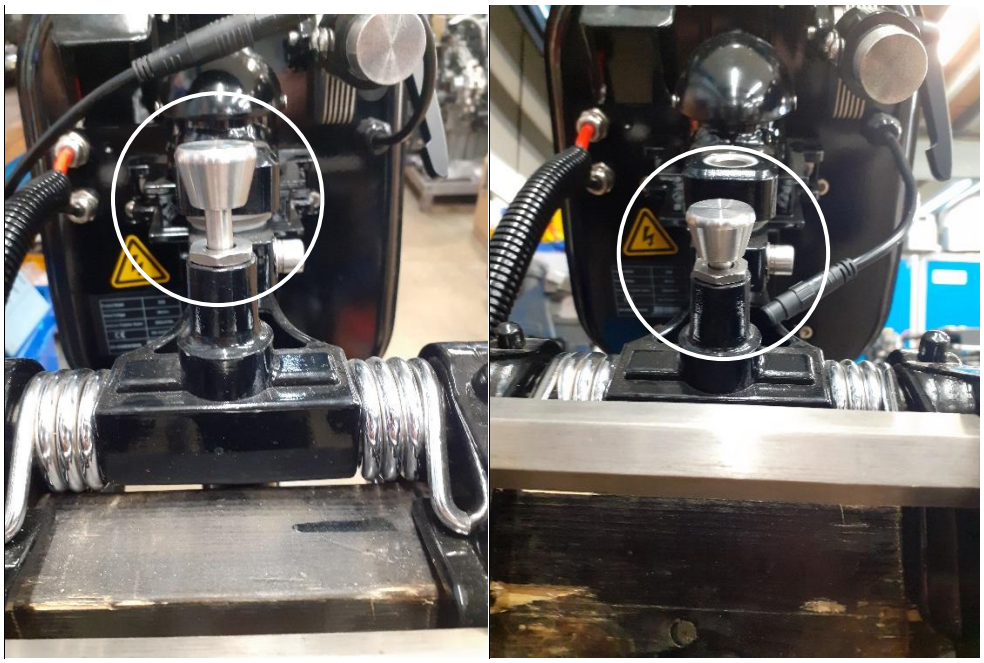

Figure 34: Outboard release lever (Left is unlocked, right is locked)

- Set the tilt lock lever to the locked position.

When running the tilt lever must be in the locked position. Failure to do this will result in the outboard leg lifting out of the water if reverse (astern) direction is engaged. This is potentially very dangerous as the propeller will be rotating.

7. Application Downloads and Information

- EZ offers a FREE Smartphone meter display app, which is supported by both Android and Apple iOS. The app can be downloaded from the respective links (*Download EZdashboard.apk (2.3MB)*)(*App Store URL: Install EZoutboard-UI*) alternatively the app can be downloaded from the Electric Outboard page of https://goldenmotor.com/
- The app allows users to track the engines speed, current and power. It also enables the logging of journeys and setting the maximum rpm limits as a percentage across the three modes.
- The speed logged can be shown in either km/h or mph.
- This is particularly useful if not using the Barrus (EB-4830 / EB-4850) LiFePO4 batteries as alternative batteries are unlikely to have the visual display gauge on top (See **Figure 19, Figure 20, Figure 21** and **Figure 22**).
- The Bluetooth adaptor dongle should already be in place when the outboard arrives.
- If it is not in place: - Ensuring your electric outboard is turned off and disconnected from the battery, carefully remove the cowl. Locate the Bluetooth adaptor port, pictured below. Lift the rubber cover and insert the Bluetooth adaptor dongle into the six-pin male plug. Ensure there is adequate space around the engine and propeller before turning it back on. Upon restarting, the light on the end of the dongle should flash green.

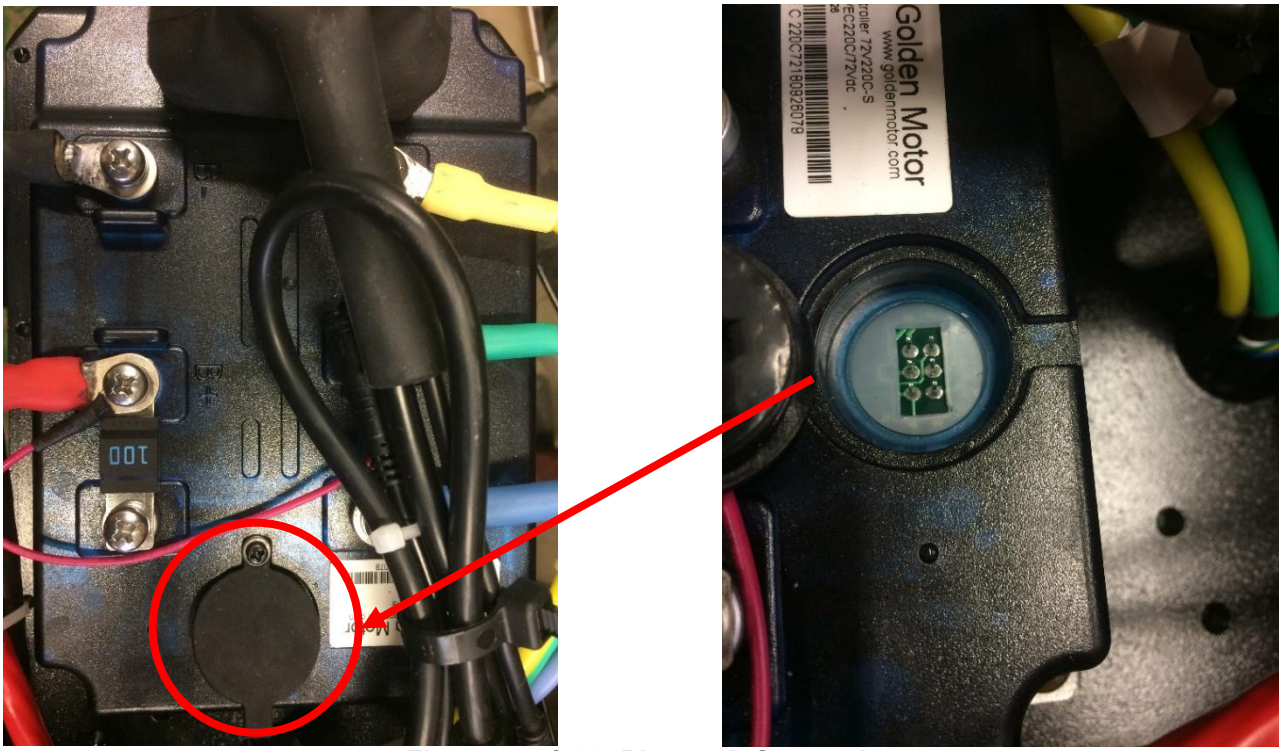

Figures 35 & 36: Bluetooth Connection

- After you have connected the Bluetooth adaptor, replace the cowl.

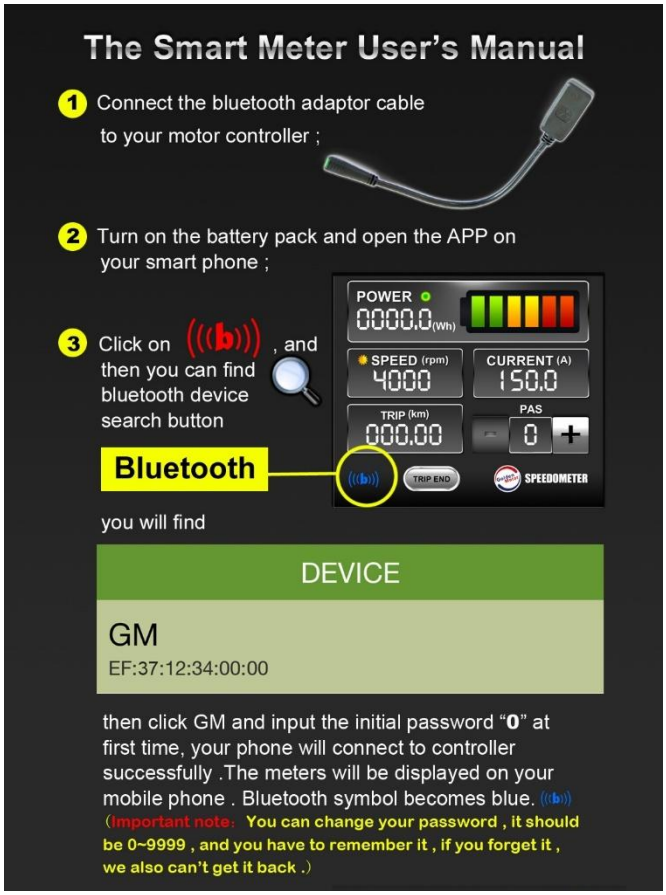

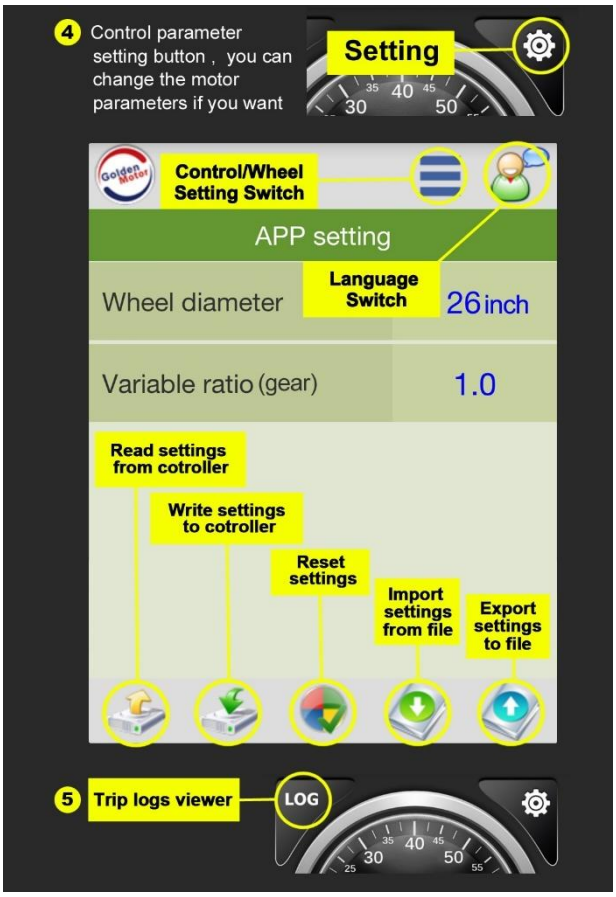

Figures 37 & 38: App Manual

Note: Often the motor will appear as "LDMC" or similar on the in-app Bluetooth menu.

Note: The app may appear in a different layout on the iPhone version.

- The log section of the app allows users to download a spreadsheet with information about the engines speed, current and power as well as the motor and controller temperatures.
- The time interval (in seconds) between logs can also be adjusted using the settings tab.

- The app has the ability to set the 3 modes to different percentages of maximum throttle. The default for each of the three modes is: Economic- 25%, Normal 60% and Sport 100%. These can be altered to the desired percentages at your own discretion. To do so, open the settings tab as explained in part 4 above. Toggle along the top to the 3-Gear Settings tab. Here you can adjust each setting ratio. Once changed you can then upload this to the motor by clicking the cloud button at the bottom. This can be seen in the picture below.
- Once uploaded the motor will continue to beep constantly until it has been restarted. Doing this, sets the maximum engine speeds for each mode limit.

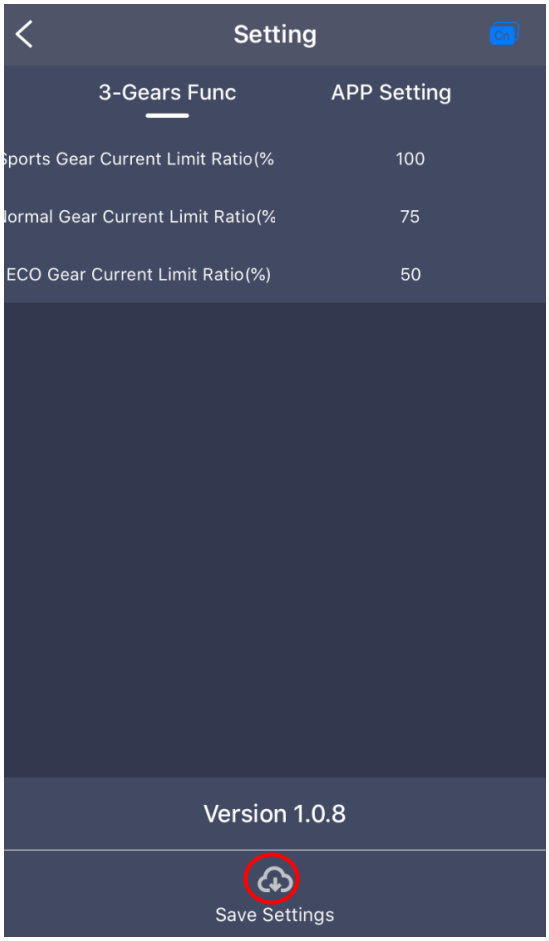

Figure 39: Setting Engine Speeds

- Once the settings have been uploaded to the outboard, they will not change unless modified through the app, even if the battery is disconnected.
- In a hire boat situation, once the settings have been made, if the Bluetooth dongle is removed the settings are locked and cannot be altered by the hirer.
- The phone will disconnect from the outboard if it is moved out of range, the application is closed, or Bluetooth is disabled on the phone.

***Note**: The screenshots in this manual show the app as it appears in version 1.0.8. Future versions may have new features and could look different.

SECTION 5 – Maintenance

NOTICE:

REFER TO THE BARRUS MANUAL PRIOR TO CARRYING OUT ANY MAINTENANCE WORK.

WARNING:

PRIOR TO CARRYING OUT ANY SERVICE OR MAINTENANCE WORK MAKE SURE THE RELEVANT PERSONAL PROTECTION EQUIPMENT IS WORN.

1. General

- The person who is to carry out the maintenance of the outboard motor needs to have the relevant mechanical and electrical competence to do so. If you do not have the relevant skills or tools it is recommended that the maintenance is carried out by your local dealer or qualified mechanic.
- The maintenance may involve being in the proximity of moving, hot or electrical parts. To reduce the risk of injury always make sure the motor is switched off and the battery is disconnected.
- If replacement parts are required always use genuine parts or parts of the equivalent design and quality. A list of replacement parts is in **Section 10 - Spare Parts.** Please contact your local dealer to order the replacement parts.

2. Removing propeller

- Straighten the split pin and pull it out using a pair of pliers.
- Remove the propeller nut, then the propeller can be removed.

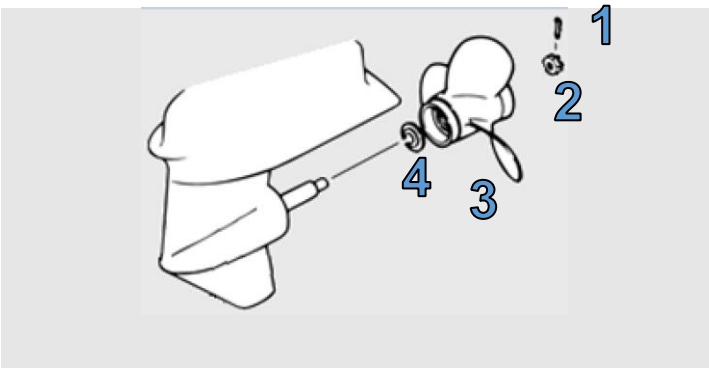

	Description
1	Split Pin
2	Propeller Nut
3	Propeller
4	Thrust Washer

Figure 40: Propeller Configuration

3. **Installing propeller**

- Apply Quicksilver 2-4-C Multipurpose Marine Lubricant to the propeller shaft.
- Fit the thrust washer and propeller onto the shaft.
- Fit the propeller nut and tighten to the correct torque (17Nm – 12.5 lb-ft).
- Align the propeller nut with the propeller shaft hole. Insert a new split pin in the hole and bend the ends of the pin.

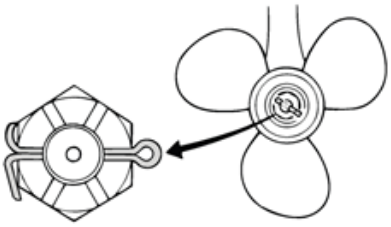

Figure 41: Fitment of split pin

Always fit a new split pin and make sure it is fitted securely.

4. **Checking coolant level**

- Remove the coolant cap (See **Figure 12**).
- Add coolant if required.
- The coolant will need to be periodically changed according to the anti-freeze manufacturer's instructions.

5. **Belt Tension**

- This requires checking after the first 100 hours of operation, and then every 500 hours or every 2-3 years (in a leisure use).
- This can only be undertaken by your local authorised dealer.
- The toothed drive belt requires changing every 1000 hours or 4-5 years (in a leisure use) or sooner if the belt becomes damaged.
- This can only be undertaken by your local authorised dealer.

Note: Belt life will be reduced if operating in shallow water or if it is not tensioned correctly.

- There is a special tool available for purchase which allows you to test the belt tension.
- To test the tension, remove the threaded plug on the side of the leg.
- Ensure the plug has a waterproof sealant added to the thread to prevent water ingress when refitted.

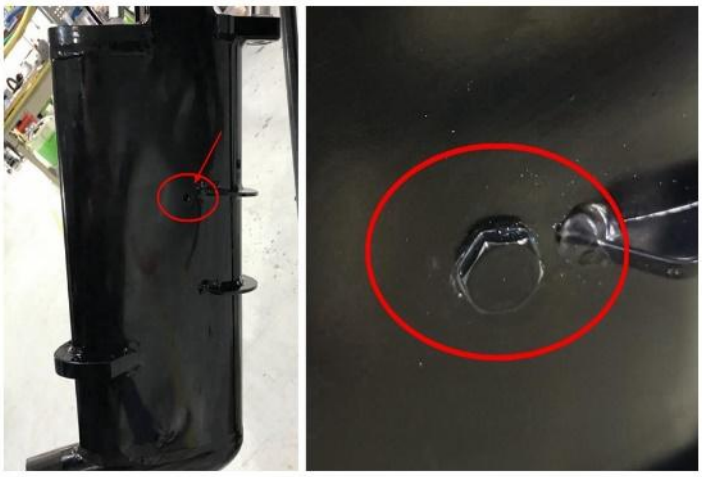

Figure 42: Removal of the threaded plug

- Set the gauge to ‘peak’ and push against the belt until the gauge is flush with the side of the leg.

Figure 43: Using the tension testing device

Engine Model	Belt Tension (N)
EZ-S06T/R (SHIRE06EZTILLPDI/SHIRE06EZREMPDI)	50-65
EZ-S10T/R (SHIRE10EZTILLPDI/SHIRE10EZREMPDI	50-65
EZ-S20T/R (SHIRE20EZTILLPDI/SHIRE20EZREMPDI	58-65

- To adjust the tension first loosen the four motor clamp screws slightly, see **Figure 44**.

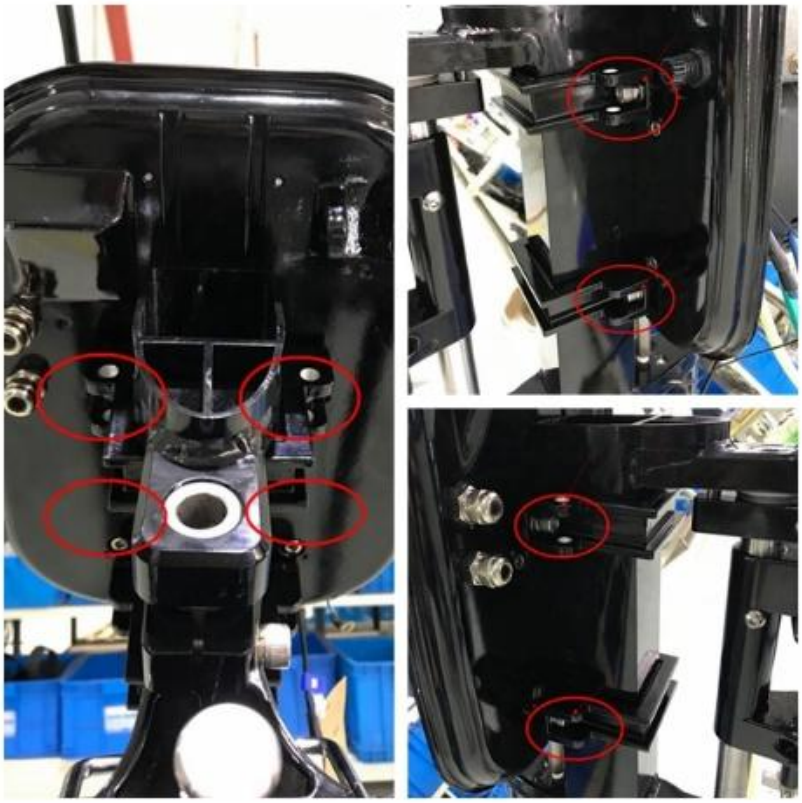

Figure 44: Locating the four motor clamp screws

- Then turn the nut to adjust the tension: clockwise to increase the tension, anticlockwise to decrease the tension.

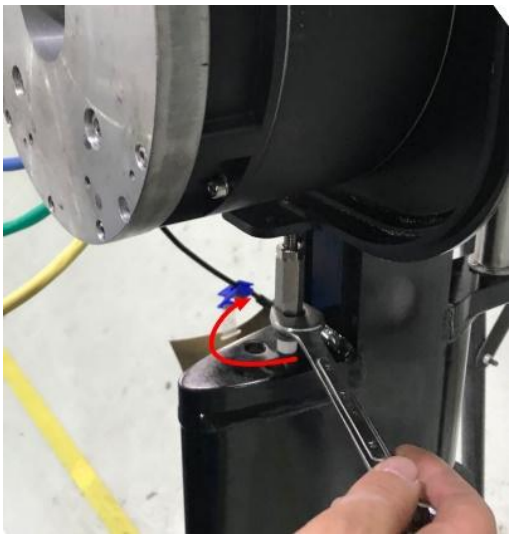

Figure 45: Changing the tension of the belt

- Before checking the belt tension again, the four motor clamp screws need to be tightened.
- When complete put a suitable thread sealer on the threaded plug and be careful not to overtighten and strip the aluminium thread in the leg.

6. Prop Shaft Bearing Replacement

- The bearings on the prop shaft need to be replaced after 500 hours.

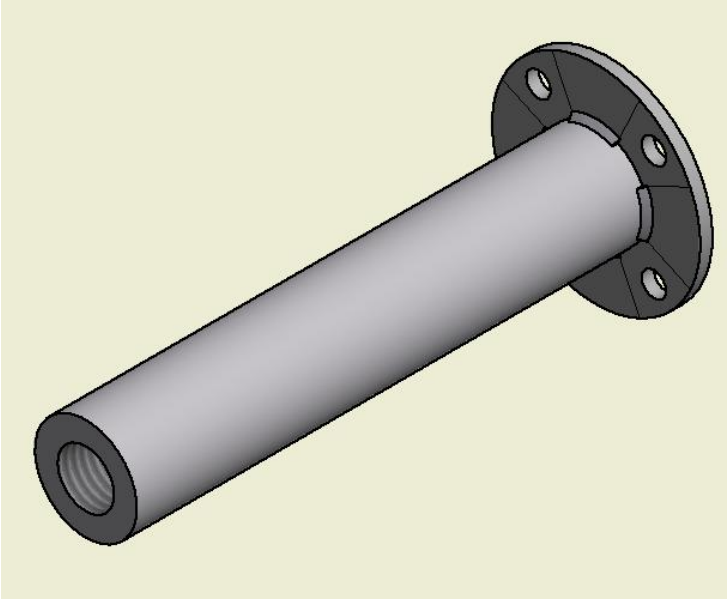

Figure 46: Seal Removal Tool

- Using the belt tension instructions loosen the belt in the leg.

Note: If the belt is not loose the shaft will not come out and belt damage could occur.

- The tool in Fig. 46 can be used to help remove the seals from the leg.
- To remove the seal drill holes into the seal in the same pattern as the tool.
- Screw self-tapping screws through the tool holes into the seal and use a slide hammer on the other end of the tool to remove the seals.
- Remove the circlip from the leg. Do not loose it as it will need to go back after the bearings have been replaced.
- Screw the prop shaft removal tool onto the end of the shaft and use a slide hammer to get the shaft out. (see section 12- special tools)
- If the forward bearings does not come out with the shaft use the bearing puller (see section 12- special tools).
- Ensure the correct bearings are ordered (see spare parts) and make sure they are on the shaft the correct way around.
- Once the bearings are on the shaft push the shaft back into the leg.

Note: the shaft should go back into the leg bearing end first.

- The seal removal tool can be used to help push the rear bearing and seals into the leg. Ensure the rear bearing and seals are sat even inside the leg.

Note: The circlip needs to go back in before the seals. Ensure the circlip sits in the groove.

- Tension the belt using the tension tester.

7. Anode Selection

Ensure you have the correct anode type fitted for the water type the vessel is in: the Brackish Water Anode, or the Magnesium Anode for Fresh Water. Replace it when it is worn to ensure it works effectively. This will help mitigate galvanic corrosion through the anode corroding instead of other parts.

A list of these parts and parts numbers can be found in SECTION 10 – Spare Parts.

A Galvanic Isolator under part no 60110140 is also available from Whisper Power:

https://www.whisperpower.com/power-distribution/galvanic-isolators-blockers

This can be used to mitigate galvanic action arising from a potential difference between the boat and the shore caused by a shore charging connection.

8. Electric Cooling Pump

The Electric Cooling Pump is rated for 250 hours, after which it should be replaced. The part number for this can be found in Section 10 – Spare Parts.

9. DC-DC Voltage Converter

The 48V-12V DC-DC Voltage Converter is rated for 500 hours, after which it should be replaced. The part number for it can be found in Section 10 - Spare Parts.

SECTION 6 – Transportation and Storage

1. **Transporting**

- When the outboard motor is removed from the boat, lay it down horizontally or put the outboard motor back in the original box.

2. **Storage**

- Store the outboard motor in a well ventilated, dry storage area.
- The outboard motor should ideally be kept upright on a rack or trolley.
- Turn the outboard upside down before storage to ensure any water that may have accumulated in the leg is expelled.
- Ensure the storage area is kept above 0°c so that frost damage does not occur.

SECTION 7 – Wiring Diagrams

1. Wiring Diagram for Electric Propulsion Outboard

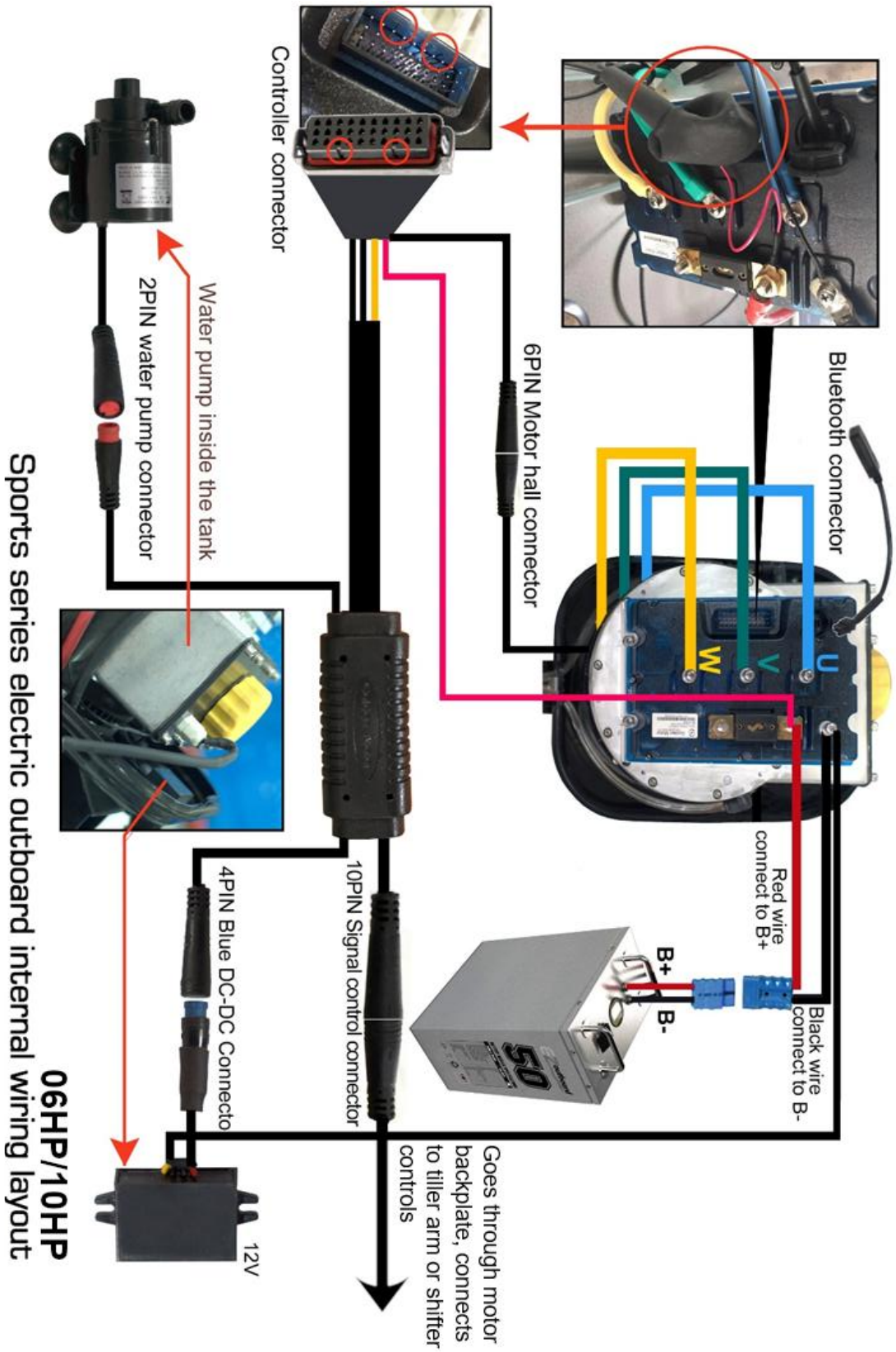

Figure 47: Outboard Wiring Diagram (06HP/10HP)

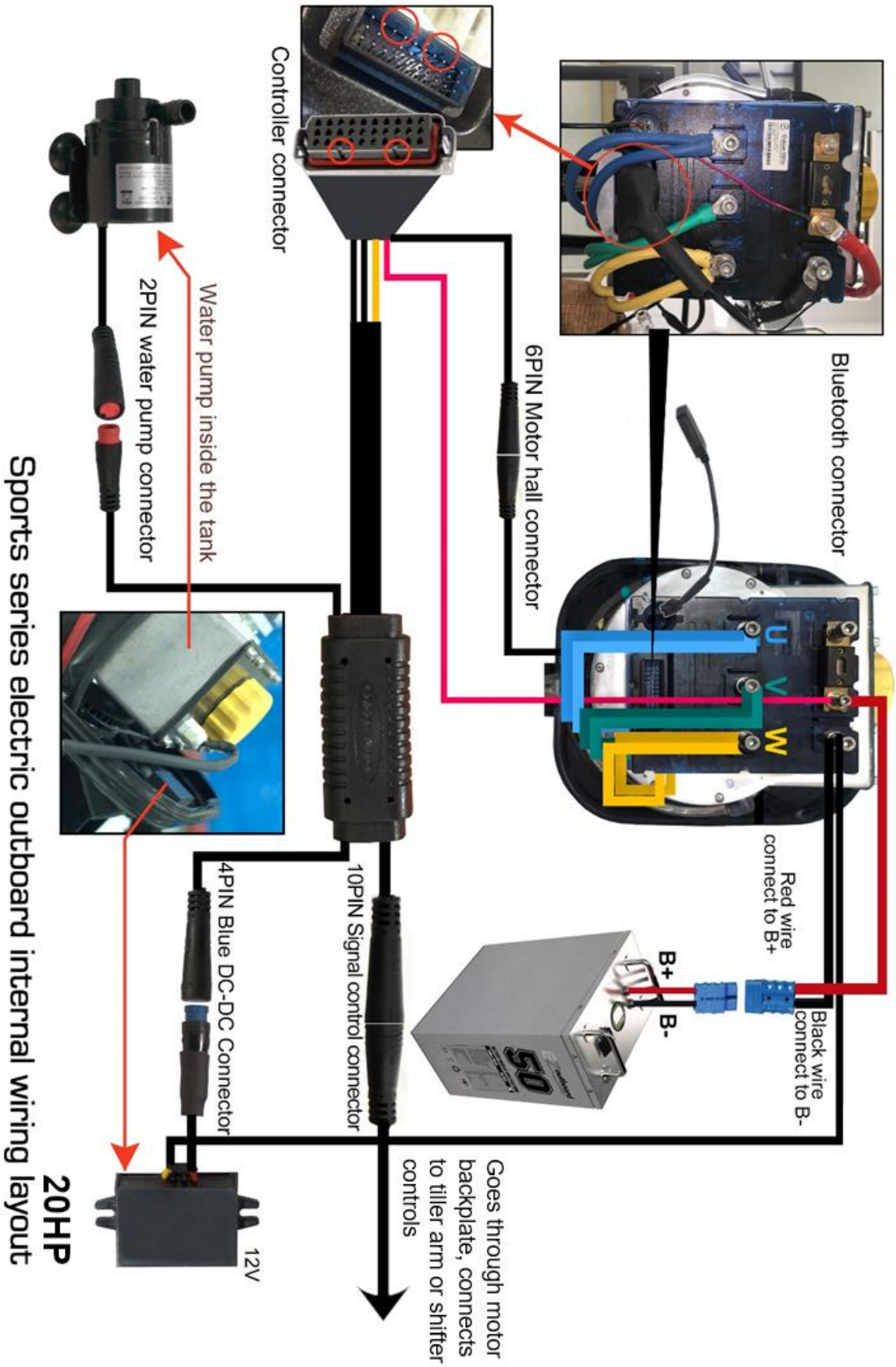

Figure 48: Outboard Wiring Diagram (S20)

2. Wiring Diagram for Speed and Direction Control Lever

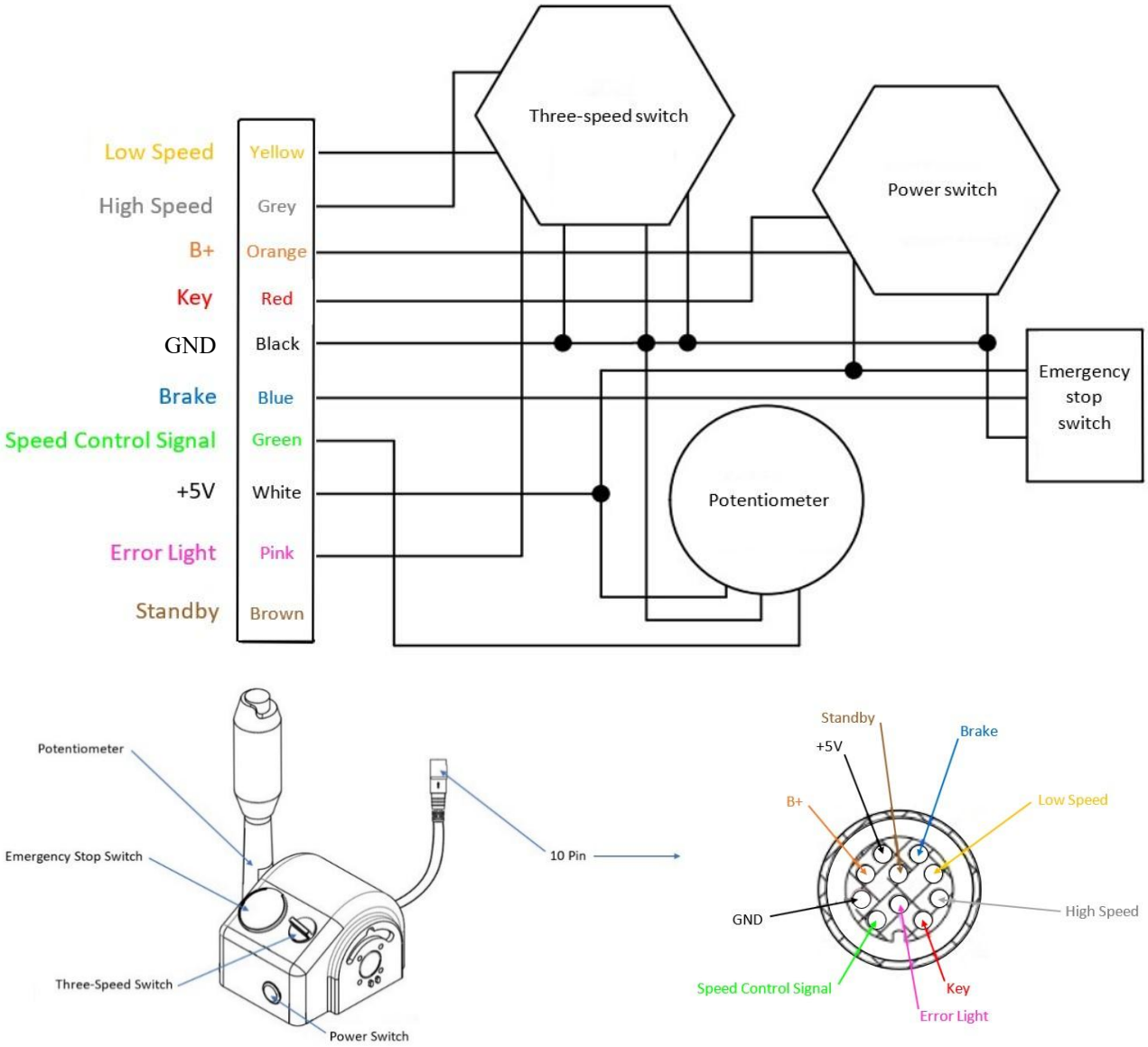

Figure 49: Speed and Direction Control Lever Wiring Diagram

SECTION 8 – Technical Data

1. Outboard Data

Engine Model	EZ-S06T/R	EZ-S10T/R	EZ-S20T/R
Output (kW)	3	6.5	10.5
Approximate Equivalent Petrol Engine Power (hp)	6	10	20
Nominal Voltage (V)	48	48	48
Input Current (A)	90	135	220
FOC Controller (Sine Wave)	VEC240	VEC300	VEC500
Max Motor Efficiency	≥90%	≥90%	≥90%
Max Propeller Speed (r/min)	2800	2800	2800
Propeller (in)	7.8 x 8	8.5 x 8	9.25 x 7
Thrust (kg)	58	78	118
Trim and Tilt System	Mechanical	Mechanical	Mechanical/Electric (Optional)
Control System	Tiller/Remote	Tiller/Remote	Tiller/Remote

2. Dry Weight of Engine Data

Dry Weight of Electric Outboard	
Model	**Dry Weight (kg)**
EZ-S06T/R (SHIRE6EZTILPDI/ SHIRE6ESREMPDI)	31kg
EZ-S10T/R (SHIRE10EZTILLPDI/ SHIRE10EZREMPDI)	35kg
EZ-S20T/R (SHIRE20EZTILLPDI/ SHIRE20EZREMPDI)	48kg

3. Shipping Weight and Packaging Dimensions

Model	Total Shipping Weight (kg)	Dimensions (cm)
EZ-S06T/R (SHIRE6EZTILLPDI/ SHIRE6EZREMPDI)	51kg	73cm × 35cm × 93cm

EZ-S10T/R (SHIRE10EZTILLPDI/ SHIRE10EZREMPDI)	56kg	73cm × 35cm × 93cm
EZ-S20T/R (SHIRE20EZTILLPDI/ SHIRE20EZREMPDI)	66kg	73cm × 35cm × 93cm

4. Outboard Dimensions

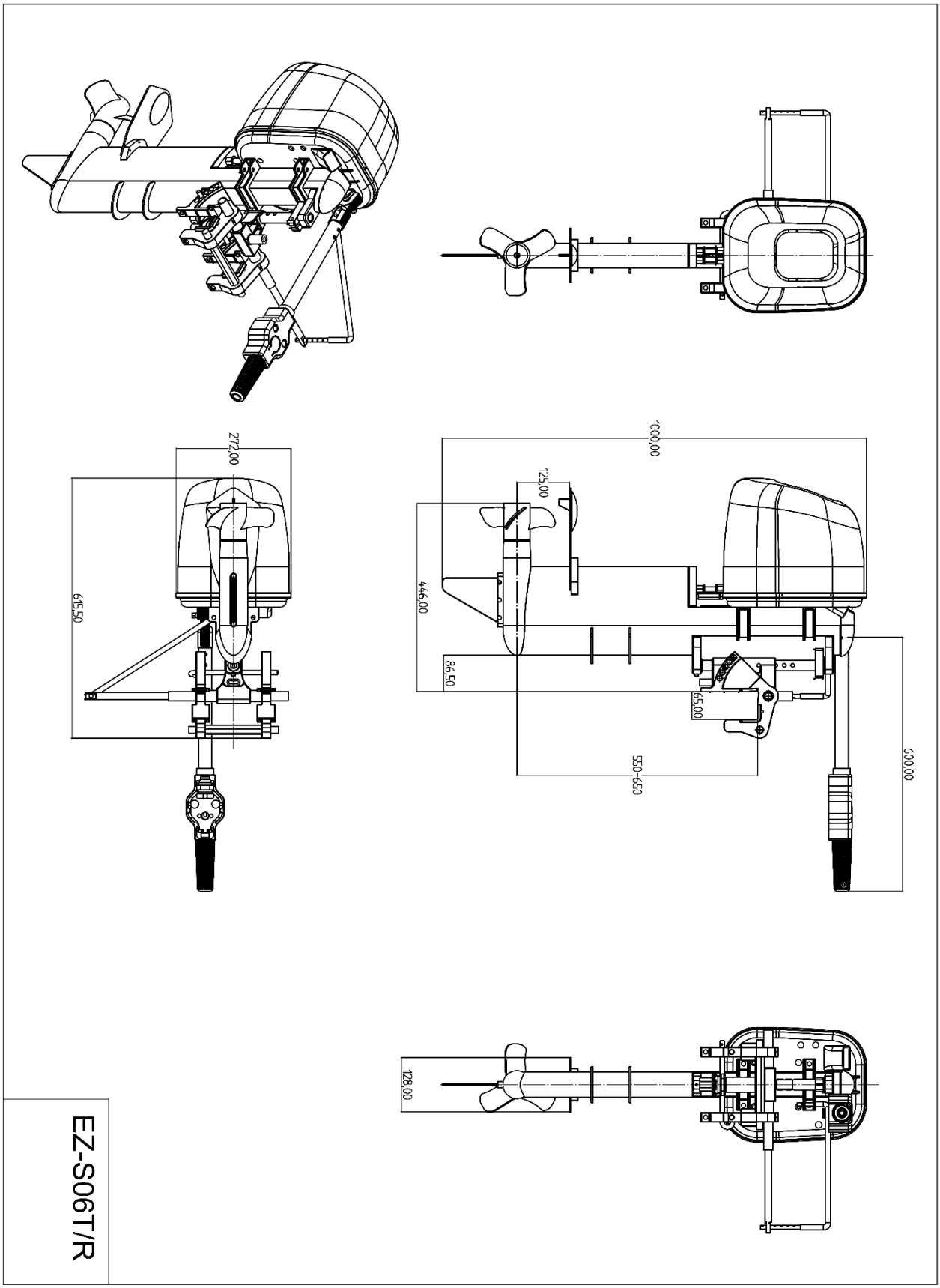

Figure 50: S06 Drawing

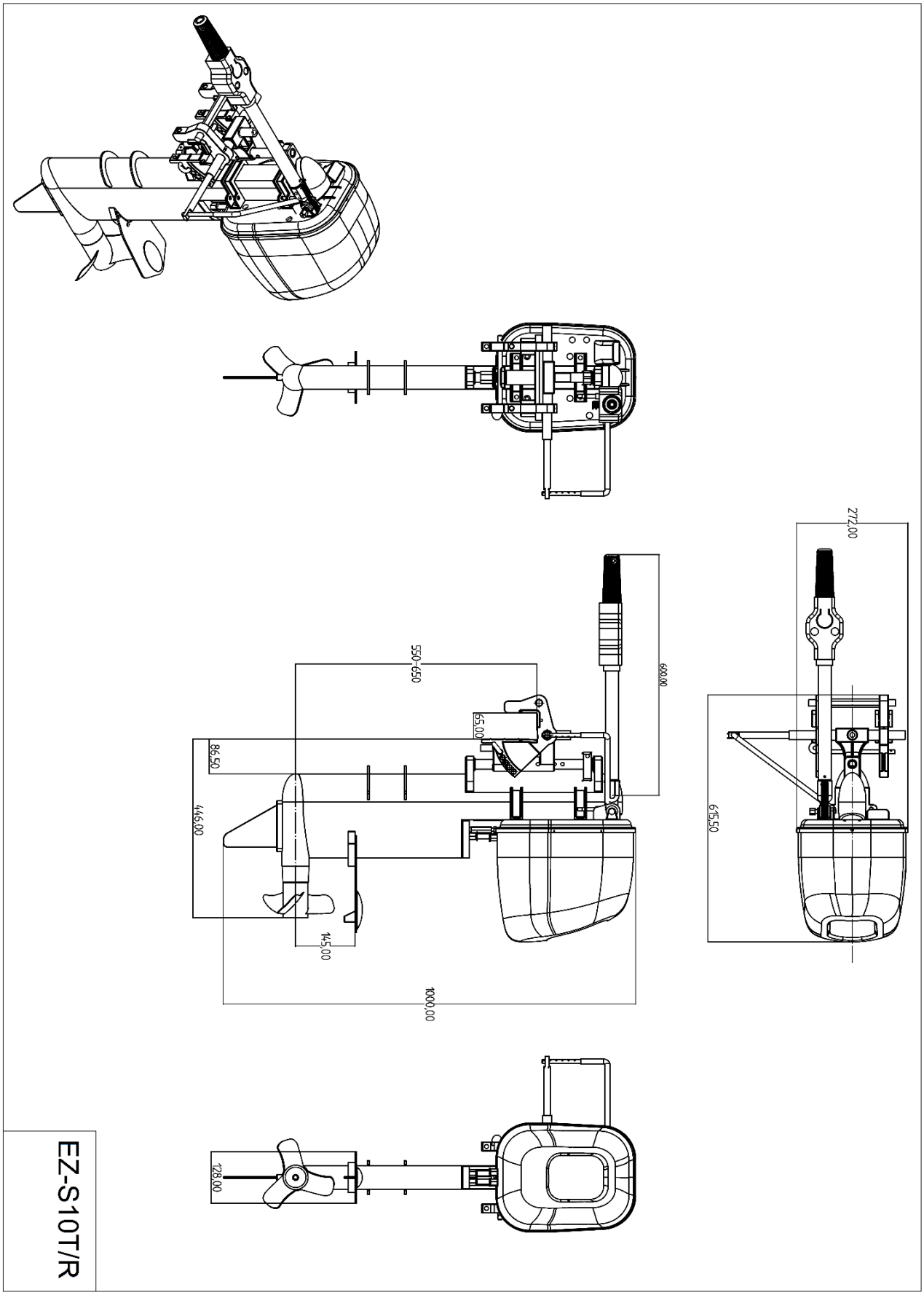

Figure 51: S10 Drawing

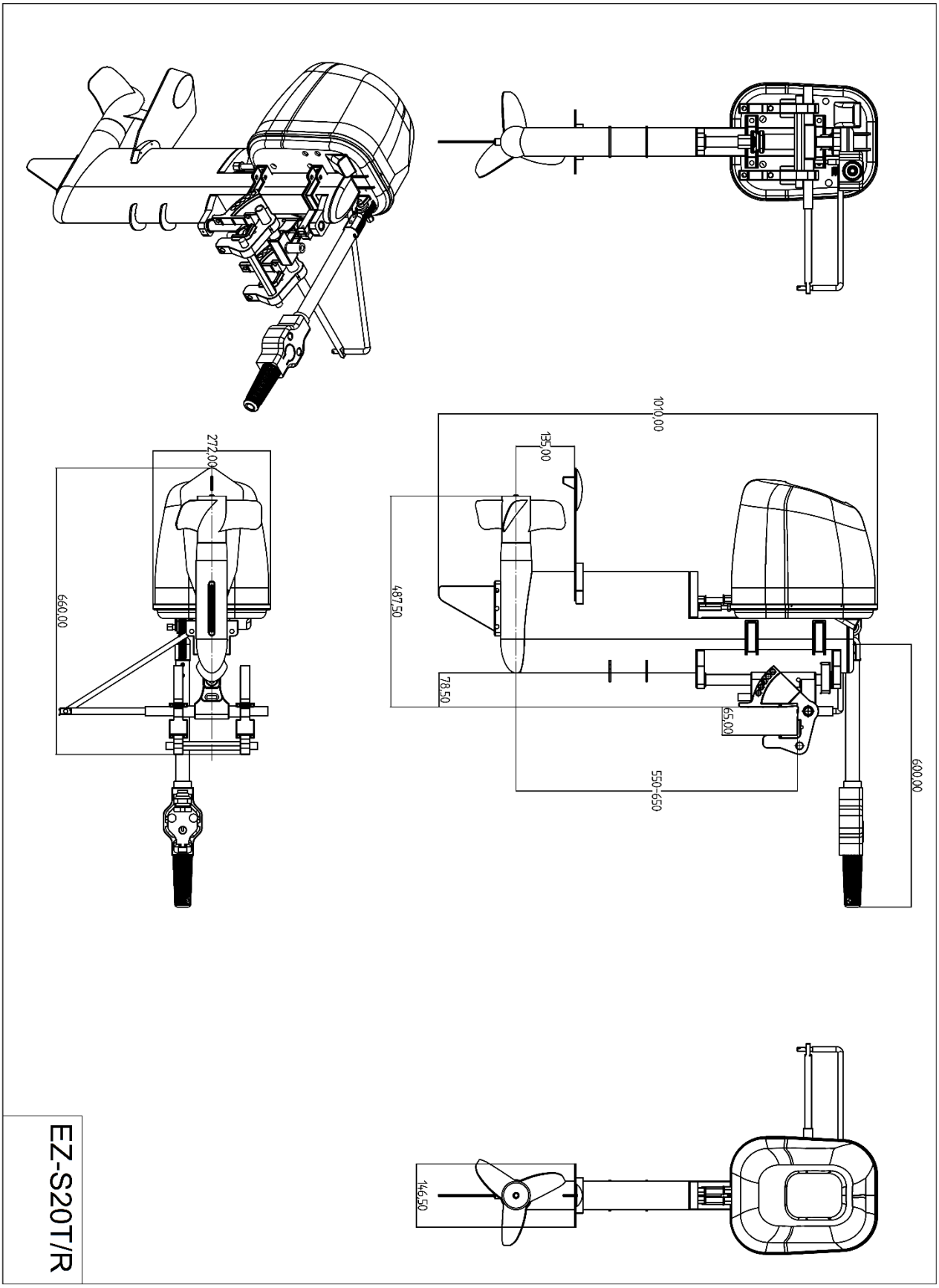

Figure 52: S20 Drawing

SECTION 9 – System Protection Characteristics

In the event of the operating system receiving a fault code, the controller will sound out one of the following error codes via a number of beeps.

System Protection Feature	Description	No. of Beeps
Over–voltage protection	Battery voltage is higher than default value.	1
Under-voltage protection	Battery voltage is lower than default value.	2
Motor over-current protection	Motor phase is short-circuiting or phase to B+ is short circuiting.	3
Stalling protection	The propeller is blocked by foreign matter.	4
HALL protection	HALL input is abnormal.	5
MOSFET (Transistor) protection	MOSFET self-checking is abnormal.	6
Phase winding disconnect protection	One of motor wires is disconnected.	7
Self-checking error protection	Self-checking is abnormal if internal system power is on.	10
Controller over-heat protection	Controller operation temperature is higher than the default value.	11
Throttle protection	Throttle input is abnormal.	12
Motor over-heat protection	Motor temperature is higher than the default value.	13
Throttle is not in the neutral position	Make sure the throttle is at “N”.	14
Controller brake	The controller brake is applied	15
Signal power protection	The controller signal power is abnormal.	16

SECTION 10 – Spare Parts

Item	EZ-S06T/R	EZ-S10T/R	EZ-S20T/R
Motor	GM-HPM3000L EZ	GM-HPM5000L EZ	GM-HPM10KL EZ
Motor Pulley	GM-BP0001-S06/S10	GM-BP0001-S06/S10	GM-BP0002-S20
Motor Controller	GM-VEC72220	GM-VEC72300	GM-VEC72500
Motor Wiring Harness	GM-CA-201VEC	GM-CA-201VEC	GM-CA-201VEC
Fuse	GM-FS0001	GM-FS0002	GM-FS0003
Bluetooth Adaptor	GM-BL0001	GM-BL0001	GM-BL0001
Laptop Connecting Lead	GM-PI-400VEC	GM-PI-400VEC	GM-PI-400VEC
Electric Cooling Pump	GM-CP0001	GM-CP0001	GM-CP0001
Belt	GM-B-5GT (S06/S10)	GM-B-5GT (S06/S10)	GM-B-5MGT (S20)
Prop Shaft and Pulley Assembly	GM-PS0001-S06	GM-PS0002-S10	GM-PS0003-S20
Rear Lower Bearing	RDG916A11	RDG916A11	RDG916A14
Forward Lower Bearing	RDG916A13	RDG916A13	RDG916A13
Forward Lower Bearing (Reduced size)	RDG916A15	RDG916A15	RDG916A15
Oil Seal	RDG007A33	RDG007A33	RDG007A34
Motor Seal	RDG007B2	RDG007B2	
Front Motor Bearing	RDG916B1	RDG916B1	
Rear Motor Bearing	RDG916A11	RDG916A11	
Propeller (in)	48-812950A02(2) (7.8 x 8)	48-897614A10 (1) (8.9 x 7.5)	48-897748A11 (9.5 x 8)
Anti-Ventilation / Cavitation Plate	GM-AS1001	GM-AS1001	GM-AS2001
Extended Anti-Cavitation Plate	RDG903A22	RDG903A22	
Anode Block	GM-AB0001	GM-AB0001	GM-AB0001

Anode (Brackish Water)	AD56	AD56	AD56
Magnesium Anode (Fresh Water)	MD56	MD56	MD56
Standard Skeg	GM-SG0001	GM-SG0001	GM-SG0001
Skeg-Rudder	RDG401A425	RDG401A425	RDG401A425
Top Cover (Cowl)	GM-TC1001	GM-TC1001	GM-TC2001
Cowl Protective Cover	GM-BG1001	GM-BG1001	GM-BG2001
Transom Mounting Bracket	GM-MBS0001	GM-MBS0001	GM-MBS0001
Transom Bracket	RDG117A59	RDG117A59	RDG117A59
Battery Master Switch	RDG2199938	RDG2199938	RDG2199938
Anderson Type Connector	RDG206A48	RDG206A48	RDG206A52
Anderson Type Connector (Charger)	RDG206A47	RDG206A47	RDG206A47
Scalable Battery Hub (Multi battery connector with master on/off switch incorporated)	GM-BH4X	GM-BHX4	GM-BHX4
Power Button Cover	GM-BC0001	GM-BC0001	GM-BC0001
Safety Key	GM-SF0001	GM-SF0001	GM-SF0001
Tiller Throttle Set	GM-TL00S1	GM-TL00S1	GM-TL00S1
Remote Throttle Set (Left Hand (Standard))	GM-TRC-010L	GM-TRC-010L	GM-TRC-010L
Remote Throttle Set (Right Hand)	GM-TRC-010R	GM-TRC-010R	GM-TRC-010R
Remote Throttle Cable (3m)	GM-RT0002	GM-RT0002	GM-RT0002
Inboard Shifter Mounting Brkt	RDG401A431	RDG401A431	RDG401A431
Steering Linkage	GM-DL00L1	GM-DL00L1	GM-DL00L1
Steering Arm	RDG407A18	RDG407A18	RDG407A18
Steering Arm Right	RDG407A21	RDG407A21	RDG407A21

Threaded Adjuster	RDG103A214	RDG103A214	RDG103A214
Steering Arm Left	RDG407A22	RDG407A22	RDG407A22
Steering Extension	RDG407A23	RDG407A23	RDG407A23
Steering Arm Bracket	RDG401A456	RDG401A456	RDG401A456
Spacer	RDG106A312	RDG106A312	RDG106A312
Quicksilver 2-4-C Multipurpose Marine Lubricant	92-8M0121966	92-8M0121966	92-8M0121966
Throttle Potentiometer	GM-110E1305	GM-110E1305	GM-110E1305
Over Centre Latch Assembly	GM-CC0001	GM-CC0001	GM-CC0001
Plastic Bush Set	GM-PB0001-S	GM-PB0001-S	GM-PB0001-S
DC-DC Voltage Converter	GM-DC12	GM-DC12	GM-DC12

Special Tools

Item	EZ-S06T/R	EZ-S10T/R	EZ-S20T/R
Belt Tension Gauge	RDG701A68	RDG701A68	RDG701A68
Seal Remover	RDG701A59	RDG701A59	RDG701A63
Bearing Puller	RDG701A60	RDG701A60	RDG701A60
Prop Shaft Removal Tool	RDG701A61	RDG701A61	RDG701A62
Motor Front Bearing/Seal Removal Tool	RDG701A69	RDG701A69	RDG701A69

***Note**: Other propeller sizes are available.

***Note**: The coolant water pump moves 3 litres of fluid per minute.

***Note**: Should the prop shaft become worn overtime such that the Forward Lower Bearing (RDG916A13, inner diameter 20mm) no longer fit, this can be replaced with the Forward Lower Bearing (Reduced Size) (RDG916A15). To fit the smaller inner diameter of the reduced size bearing, the prop shaft will have to be turned down to 17mm.

The skeg-rudder (RDG401A425) is an optional extra that allows for greater steering control at slow speeds, and slightly better propeller protection from grounding. The skeg-rudder simply replaces the existing skeg (**Figure 53**).

Figure 53: Skeg-Rudder

If converting from an inboard petrol or diesel engine (or the existing transom is too thick) there is a transom bracket available.

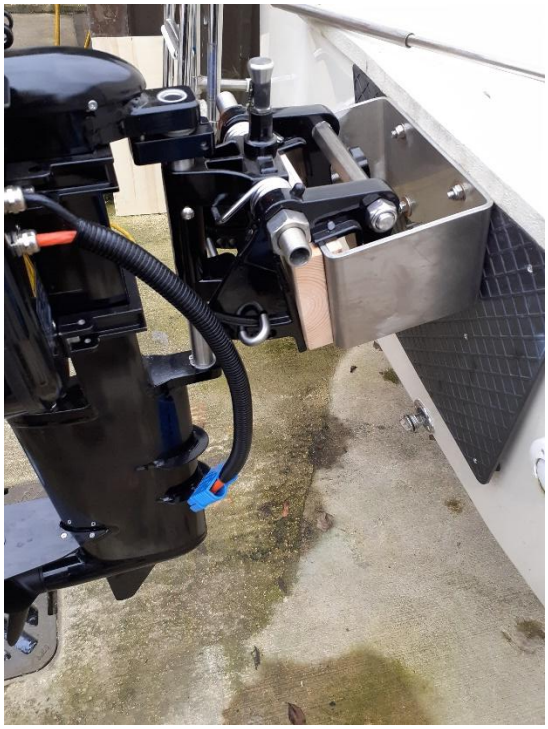

Figure 54: Transom bracket

There is available an extended anti-cavitation plate which allows for better steering and simply replaces the existing anti-cavitation plate.

Note: The anode will need to be removed from the existing anti-cavitation plate and put onto the new one.

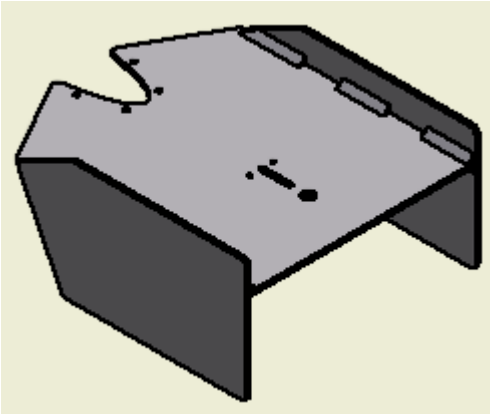

Figure 55: Extended Anti-Cavitation Plate

SECTION 11 – Security Products

Barrus offers a range of security products for the outboard.

1. **STAZO Nutlock**

- Part Number – **42.117.020**
- Thick-walled stainless-steel lock
- Includes a STAZO plus cylinder and security card
- Easy to install

Figure 56: STAZO Nutlock

2. **STAZO Security Chain**

- Part Numbers - **42.117.315** – 1.5m Chain
  - **42.117.325** – 2.5m Chain
- Lasso security chain with square shackles
- Made of hardened steel
- Includes STAZO protective cover
- As set with STAZO ART lock

Figure 57: STAZO Security Chain

3. **STAZO Bracket Nut**

- Part Number – **42.117.361** – M8
- Stainless steel
- Easy installation

Figure 58: STAZO Bracket Nut

4. **STAZO Outboard Lock**

- Part Number – **42.117.002**
- Solid stainless-steel lock
- Dimensions – 40 x 40 x 300mm

Figures 59 & 60: STAZO Outboard Lock

5. Talamex Outboard Motor Lock

- Part Number – **42.130.100**
- AISI 316 cylinder lock, anti-rattle
- Packed in blister
- Dimensions – 300 x 40 x 35mm

Figure 61: Talamex Outboard Motor Lock

SECTION 12 – Special Tools

Barrus offers serval tools to assist dealers and mechanics.

1. **Belt Tension Gauge (RDG701A68)**
   - Instructions on use can be found in section 5- maintenance.
   - This tool can be used to check the tension of the belt.

Figure 62: Belt Tension Gauge

***Note**: Use of alternative belt tension gauges will void warranty.

2. **Seal Remover (RDG701A59 / RDG701A63)**

- Instructions on use can be found in section 5- maintenance.
- This tool can be used to remove the seals in the lower leg, this is needed to replace the bearings.

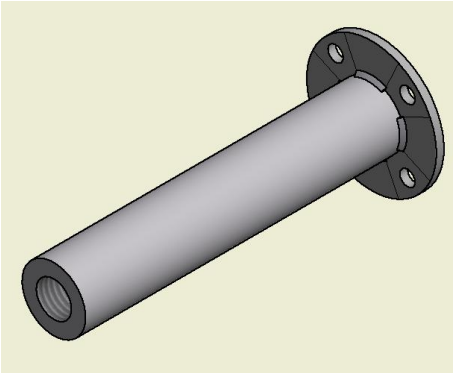

Figure 63: Seal Remover

3. **Bearing Puller (RDG701A60)**

- The forward bearing can get stuck in the leg when the prop shaft is removed.
- This tool will help remove the bearing easily.

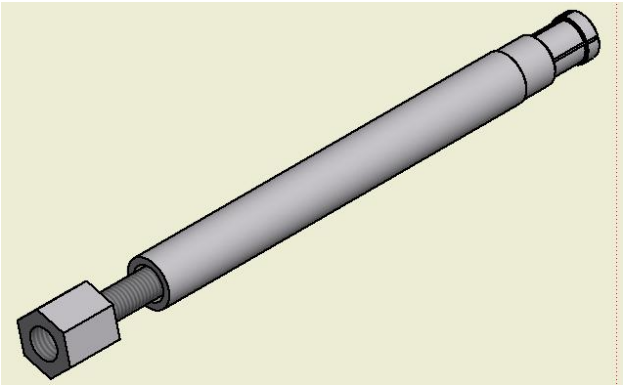

Figure 64: Bearing Puller

4. **Prop Shaft Removal Tool (RDG701A61 / RDG701A62)**

- This screws onto the prop shaft and into a slide hammer to help remove the prop shaft from the leg and push the shaft back into the leg.

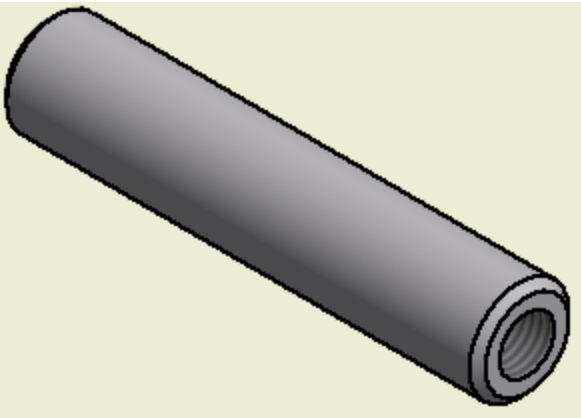

Figure 65: Prop Shaft Removal Tool

5. Motor Front Bearing/Seal Removal Tool (RDG701A69)

- Adjustable pin spanner for removal of motor front bearing and front seal.
- See **Figure 67** for where to use.

Figure 66: Motor Front Bearing/Seal Removal Tool

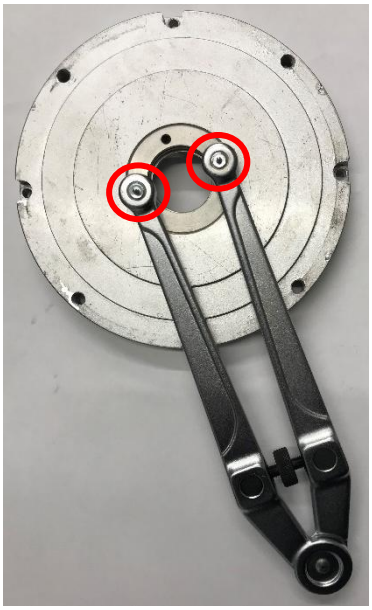

Figure 67: How to use Motor Front Bearing/Seal Removal Tool

SECTION 13 – Afterlife Recycling

When it becomes necessary to dispose of your machine, you must take it to your local Civic Amenity Site or recycling centre. For further information please contact your Local Authority for disposal advice.

Contact local recycling centres or check their websites to find out whether they recycle engine coolant. If they don't, they may be able to direct you to your nearest drop-off point. Some garages will also accept old coolant. Recycle your coolant in a well-sealed container that is clearly labelled.

Waste Electrical Electronic Equipment (WEEE) recycling.

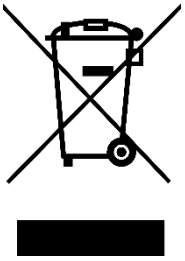

Products contain WEEE waste which should not be disposed of in your domestic waste. You MUST recycle WEEE in accordance with your local authority or recycling centre.

Battery recycling: Certain products contain batteries which should not be disposed of in your domestic waste. You MUST recycle batteries in accordance with your local authority or recycling centre.

Unwanted packaging materials should be sorted and taken to a recycling centre so they can be disposed of in a manner which is compatible with the environment.

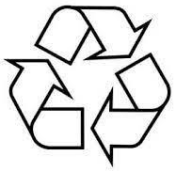

Reduce, Reuse, Recycle

For further information about disposal please contact your Local Authority. You can also get more advice and guidance about recycling at the following website http://www.recycle-more.co.uk.

SECTION 14 – Declarations

1. Declaration of Conformity for Recreational Craft Propulsion Engine with the requirements of Directive 2012/53/EU. (CE Marking)

Name of Engine Manufacturer: **Golden Motor LTD**

Name of Authorised Representative: **E.P.Barrus LTD**

Address: **E.P.Barrus LTD, Launton Road, Bicester, Oxon, OX26 4UR, England**

Name of Notified Body for assessment: Devi Comfort B.V.

Address: Vaart 3, 1713GR Obdam, The Netherlands

Description of Engine(s) and Essential Requirements

Engine Type: Outboard Motor **Power Source:** Electric **Voltage:** 48 Volts

Identification of Engine(s) covered by this Declaration of Conformity

Barrus Engine Models	**Factory Family Code**
Shire6EZ-Till (SHIRE6EZTILLPDI)	EZ S06T
Shire6EZ-Rem (SHIRE6EZREMPDI)	EZ S06R
Shire10EZ-Till (SHIRE10EZTILLPDI)	EZ S10T
Shire10EZ-Rem (SHIRE10EZREMPDI)	EZ S10R
Shire20EZ-Till (SHIRE20EZTILLPDI)	EZ S20T
Shire20EZ-Rem (SHIRE20EZREMPDI)	EZ S20R

Essential Requirements	Standards	Other normative document/method	Technical file	Specify in more detail *=Mandatory standard
Engine Identification	☐	☑ RCD (II)	☑	2013/53 EU
Durability	☐	☐	☑	2013/53 EU
Owner's Manual	☑	☐	☐	ISO10240

Is in conformity with the standards listed below:

EN 61000-6-3 (2007) Electromagnetic compatibility (EMC) - Part 6-3: Generic standards - Emission standard for residential, commercial, and light-industrial environments

EN ISO 12100 (2010) Safety of machinery - General principles for design

EN ISO 60204 (2012) Safety of machinery - Electrical equipment of machines

BS EN ISO 8848-2017 - Small craft-Remote steering

BS EN ISO 16315:2016 - Small craft – Electric propulsion system

This declaration of conformity is issued under the sole responsibility of the manufacturer. I declare on behalf of the engine manufacturer that the engine(s) [is (are) in conformity with the type(s) for which above mentioned EC type-examination or type approval certificate(s) has (have) been issued and] will meet the requirements of Directive 2013/53/EU when installed in a recreational craft, in accordance with the engine manufacturer's supplied instructions and that this (these) engine(s) must not be put into service until the recreational craft which it is (they are) to be installed has been declared in conformity with the relevant provisions of the above mentioned Directives.

Tim Hart

Sales Director

Signed: Bicester, UK

Date: 11/03/2020

2. Declaration of Conformity for Recreational Craft Propulsion Engine with the requirements of the Recreational Craft Regulations 2017 (UKCA Marking)

Name of Engine Manufacturer: **Golden Motor LTD**

Name of Authorised Representative: **E.P.Barrus LTD**

Address: **E.P.Barrus LTD, Launton Road, Bicester, Oxon, OX26 4UR, England**

Name of Notified Body for Assessment: Not Applicable (Self Assessment)

Description of Engine(s) and Essential Requirements

Engine Type: **Outboard Motor** Power Source: **Electric** Voltage (DC): **48 Volts**

Identification of Engine(s) covered by this Declaration of Conformity.

Barrus Engine Models	**Factory Family Code**	**Output**
Shire6EZ-Till (SHIRE6EZTILLPDI)	EZ S06T	4kW
Shire6EZ-Rem (SHIRE6EZREMPDI)	EZ S06R	4kW
Shire10EZ-Till (SHIRE10EZTILLPDI)	EZ S10T	6kW
Shire10EZ-Rem (SHIRE10EZREMPDI)	EZ S10R	6kW
Shire20EZ-Till (SHIRE20EZTILLPDI)	EZ S20T	10kW
Shire20EZ-Rem (SHIRE20EZREMPDI)	EZ S20R	10kW

Essential Requirements	Standards	Other normative document/method	Technical file	Specify in more detail *=Mandatory standard
Engine Identification	☐	☑ RCR	☑	
Durability	☐	☐	☑	
Owner's Manual	☑	☐	☐	ISO10240

Is in conformity with the standards listed below:

ISO 16315:2016 - Small craft – Electric propulsion system

BS 61000-6-3 (2007) Electromagnetic compatibility (EMC) - Part 6-3: Generic standards -

ISO 12100 (2010) Safety of machinery - General principles for design

ISO 60204 (2012) Safety of machinery - Electrical equipment of machines

ISO 8848-2017 - Small craft-Remote steering

This declaration of conformity is issued under the sole responsibility of the manufacturer. I declare on behalf of the engine manufacturer that the engine(s) [is (are) in conformity with the type(s) for which above mentioned EC type-examination or type approval certificate(s) has (have) been issued and] will meet the requirements of the Recreational Craft Regulations 2017 when installed in a recreational craft, in accordance with the engine manufacturer's supplied instructions and that this (these) engine(s) must not be put into service until the recreational craft which it is (they are) to be installed has been declared in conformity with the relevant provisions of the above mentioned Directives.

Tim Hart

Sales Director

Signed: Bicester, UK

Date: 03/02/2021

3. LiFEP04 Battery TUV Safety Data Sheet

Technical Report No. 64.168.20.60023.01
Rev.00
Dated 2020-07-10

Safety Data Sheet

Regulation (EU) 2015/830 (REACH Annex II)

Applicant:	GOLDEN MOTOR TECHNOLOGY CO., LTD
Address:	Room No. 1401-1405, the 5th building, No. 18-50 Changwu Zhong Road, Wujin, Changzhou 213164
Attn.:	Mr. Yao Guohua
Sample Description:	LiFePO4 BATTERY
Model No.:	EB-4850

TÜV SÜD Certification and Testing (China) Co., Ltd. Guangzhou Branch
TÜV SÜD Group

Prepared by:

Autumn Lin

Autumn Lin
Project Handler

Reviewed by:

Kevin Zhang

Kevin Zhang
Designated Reviewer

Any use for advertising purposes must be granted in writing. This technical report may only be quoted in full. This report is the result of a single examination of the object in question and is not generally applicable evaluation of the quality of other products in regular production. For further details, please see testing and certification regulation, chapter A-3.4.

TÜV SÜD Certification and Testing (China) Co., Ltd. Guangzhou Branch
TÜV SÜD Group
5F, Communication Building, 163 Pingyun Rd, Huangpu West Ave.
Guangzhou 510656, P.R. China
Tel.: (86) 20 38320668
Fax: (86) 20 38320478

SECTION 1: Identification of the substance/mixture and of the company/undertaking

1.1. Product identifier

Product form : Article

Trade name : LiFePO4 BATTERY

Synonyms : EB-4850

1.2. Relevant identified uses of the substance or mixture and uses advised against

1.2.1. Relevant identified uses

Use of the substance/mixture : Not applicable

1.2.2. Uses advised against

Restrictions on use : No information available

1.3. Details of the supplier of the safety data sheet

GOLDEN MOTOR TECHNOLOGY CO., LTD

Room No. 1401-1405, the 5th building, No. 18-50 Changwu Zhong Road,
Wujin, Changzhou 213164

T +86-519-81004118

F +86-519-81004118

Email sales@goldenmotor.com

1.4. Emergency telephone number

Emergency number : +86-519-81004118

SECTION 2: Hazards identification

2.1. Classification of the substance or mixture

Classification according to Regulation (EC) No. 1272/2008 [CLP]

Not classified

Adverse physicochemical, human health and environmental effects

To our knowledge, this product does not present any particular risk, provided it is handled in accordance with good occupational hygiene and safety practice.

2.2. Label elements

Labelling according to Regulation (EC) No. 1272/2008 [CLP]

No labelling applicable

2.3. Other hazards

No additional information available

SECTION 3: Composition/information on ingredients

3.1. Substances

Not applicable

3.2. Article

Name	Product identifier	%	Classification according to Regulation (EC) No. 1272/2008 [CLP]
Phosphoric acid, iron(2+) lithium salt (1:1:1)	(CAS-No.) 15365-14-7 (EC-No.) 476-700-9;604-917-2	34.32	Not classified
Electrolyte	-	24.32	NA
Graphite	(CAS-No.) 7782-42-5 (EC-No.) 231-955-3	15.31	Not classified
Copper	(CAS-No.) 7440-50-8 (EC-No.) 231-159-6	11.48	Not classified
Aluminum	(CAS-No.) 7429-90-5 (EC-No.) 231-072-3 (EC Index-No.) 013-002-00-1	5.61	Flam. Sol. 1, H228 Water-react. 2, H261
Spuer-p	-	0.8	NA

Full text of H-statements: see section 16

SECTION 4: First aid measures

4.1. Description of first aid measures

First-aid measures general : If symptoms persist call a doctor.

First-aid measures after inhalation : Remove person to fresh air and keep comfortable for breathing. If breathing stops, give artificial respiration. Seek medical attention immediately.

First-aid measures after skin contact : Remove contaminated clothing and shoes. Wash skin with mild soap and water. Wash clothing before re-using. If skin irritation occurs : Get medical advice/attention.

First-aid measures after eye contact : Immediately flush eyes thoroughly with water for at least 15 minutes. If necessary seek medical advice.

First-aid measures after ingestion : Do NOT induce vomiting. Call a poison center or a doctor if you feel unwell.

4.2. Most important symptoms and effects, both acute and delayed

Symptoms/effects : No information available.

4.3. Indication of any immediate medical attention and special treatment needed

Treat symptomatically.

SECTION 5: Firefighting measures

5.1. Extinguishing media

Suitable extinguishing media : Water spray. Dry powder. Foam. Carbon dioxide (CO2).

Unsuitable extinguishing media : No information available.

5.2. Special hazards arising from the substance or mixture

Hazardous decomposition products in case of fire : Toxic fumes may be released.

Specific hazards arising from the substance or mixture : Battery may burst and release hazardous decomposition products when exposed to a fire situation. Lithium ion batteries contain flammable electrolyte that may vent, ignite and produce sparks when subjected to high temperature (>150℃ (302°F)).when damaged or abused (e.g.mechanical damage or electrical overcharging);may burn rapidly with flare-burnig effect; may ignite other batteries in cloths proximity.

5.3. Advice for firefighters

Protection during firefighting : Do not attempt to take action without suitable protective equipment. Self-contained breathing apparatus. Complete protective clothing.

SECTION 6: Accidental release measures

6.1. Personal precautions, protective equipment and emergency procedures

6.1.1. For non-emergency personnel

Emergency procedures : Ventilate spillage area. Wear protective gloves. Keep unprotected persons away.Remove ignition sources,evacuate area. Sweep up using a method that does not generate dust. Collect as much of the spilled material as possible, placed the spilled material into a suitable disposal container.keep spilled material out of sewers,ditches and bodies of water.

6.1.2. For emergency responders

Protective equipment : Do not attempt to take action without suitable protective equipment. For further information refer to section 8: "Exposure controls/personal protection".

6.2. Environmental precautions

Avoid release to the environment without proper govermental permits.

6.3. Methods and material for containment and cleaning up

Methods for cleaning up : Mechanically recover the product.

6.4. Reference to other sections

For further information refer to section 13.

SECTION 7: Handling and storage

7.1. Precautions for safe handling

Precautions for safe handling : Ensure good ventilation of the work station. Wear personal protective equipment. Ground/bond container and equipment.

Hygiene measures : Do not eat, drink or smoke when using this product. Always wash hands after handling the product.

Information about fire and explosion protection : Batteries may explode or cause burns, if disassembled, crushed or exposed to fire or high temperatures. Do not short or install with incorrect polarity.

7.2. Conditions for safe storage, including any incompatibilities

Storage conditions : Store in a well-ventilated place. Keep cool. Keep away from heat and direct sunlight.

7.3. Specific end use(s)

No information available.

SECTION 8: Exposure controls/personal protection

8.1. Control parameters

Aluminum (7429-90-5)	
Austria - Occupational Exposure Limits	
MAK (mg/m³)	10 mg/m³ (inhalable fraction)
MAK Short time value (mg/m³)	20 mg/m³ (inhalable fraction)
Belgium - Occupational Exposure Limits	
Limit value (mg/m³)	1 mg/m³
Bulgaria - Occupational Exposure Limits	
OEL TWA (mg/m³)	10 mg/m³ (metal dust) 1.5 mg/m³ (respirable fraction)

Aluminum (7429-90-5)	
Croatia - Occupational Exposure Limits	
GVI (granična vrijednost izloženosti) (mg/m³)	10 mg/m³ (total dust) 4 mg/m³ (respirable dust)
Croatia - Biological limit values	
Croatia - BLV	200 mg/l Parameter: Aluminum - Medium: urine - Sampling time: at the end of the work shift
Czech Republic - Occupational Exposure Limits	
Expoziční limity (PEL) (mg/m³)	10 mg/m³ (dust)
Denmark - Occupational Exposure Limits	
Grænseværdi (8 timer) (mg/m³)	5 mg/m³ (dust, fume and powder, total) 2 mg/m³ (dust and powder, respirable)
Estonia - Occupational Exposure Limits	
OEL TWA (mg/m³)	10 mg/m³ (total dust) 4 mg/m³ (respirable dust)
France - Occupational Exposure Limits	
VME (mg/m³)	10 mg/m³ (metal) 5 mg/m³ (dust)
Greece - Occupational Exposure Limits	
OEL TWA (mg/m³)	10 mg/m³ (inhalable fraction) 5 mg/m³ (respirable fraction)
Hungary - Occupational Exposure Limits	
AK-érték	6 mg/m³ (respirable dust)
Ireland - Occupational Exposure Limits	
OEL (8 hours ref) (mg/m³)	1 mg/m³ (respirable fraction)
OEL (15 min ref) (mg/m3)	3 mg/m³ (calculated-respirable dust)
Latvia - Occupational Exposure Limits	
OEL TWA (mg/m³)	2 mg/m³

Aluminum (7429-90-5)	
Lithuania - Occupational Exposure Limits	
IPRV (mg/m³)	5 mg/m³ (inhalable fraction) 2 mg/m³ (respirable fraction) 1 mg/m³
Poland - Occupational Exposure Limits	
NDS (mg/m³)	2.5 mg/m³ (non-stabilized-inhalable fraction) 1.2 mg/m³ (non-stabilized-respirable fraction)
Portugal - Occupational Exposure Limits	
OEL TWA (mg/m³)	10 mg/m³ (metal dust)
Romania - Occupational Exposure Limits	
OEL TWA (mg/m³)	3 mg/m³ (dust) 1 mg/m³ (fume)
OEL STEL (mg/m³)	10 mg/m³ (dust) 3 mg/m³ (fume)
Romania - Biological limit values	
Romania - BLV	200 µg/l Parameter: Aluminum - Medium: urine - Sampling time: end of shift
Slovakia - Biological limit values	
Slovakia - BLV	60 µg/g creatinine Parameter: Aluminum - Medium: urine - Sampling time: not critical
Spain - Occupational Exposure Limits	
VLA-ED (mg/m³)	10 mg/m³ (dust)
Sweden - Occupational Exposure Limits	
nivågränsvärde (NVG) (mg/m³)	5 mg/m³ (total dust) 2 mg/m³ (respirable dust)
United Kingdom - Occupational Exposure Limits	
WEL TWA (mg/m³)	10 mg/m³ (inhalable dust) 4 mg/m³ (respirable dust)
WEL STEL (mg/m³)	30 mg/m³ (calculated-inhalable dust) 12 mg/m³ (calculated-respirable dust)

Aluminum (7429-90-5)	
Norway - Occupational Exposure Limits	
Grenseverdier (AN) (mg/m³)	5 mg/m³ (pyrotechnical-powder)
Grenseverdier (Korttidsverdi) (mg/m3)	10 mg/m³ (pyrotechnical-powder)
Switzerland - Occupational Exposure Limits	
MAK (mg/m³)	3 mg/m³ (respirable dust)
Switzerland - Biological limit values	
Switzerland - BLV	60 µg/g creatinine Parameter: Aluminum - Medium: urine - Sampling time: no restrictions
USA - ACGIH - Occupational Exposure Limits	
ACGIH TWA (mg/m³)	1 mg/m³ (respirable particulate matter)
ACGIH chemical category	Not Classifiable as a Human Carcinogen

Copper (7440-50-8)	
Austria - Occupational Exposure Limits	
MAK (mg/m³)	1 mg/m³ (inhalable fraction) 0.1 mg/m³ (respirable fraction, smoke)
MAK Short time value (mg/m³)	4 mg/m³ (inhalable fraction) 0.4 mg/m³ (respirable fraction, smoke)
Belgium - Occupational Exposure Limits	
Limit value (mg/m³)	0.2 mg/m³ (fume) 1 mg/m³ (dust and mist)
Bulgaria - Occupational Exposure Limits	
OEL TWA (mg/m³)	0.1 mg/m³ (metal vapor)
Croatia - Occupational Exposure Limits	
GVI (granična vrijednost izloženosti) (mg/m³)	0.2 mg/m³ (fume) 1 mg/m³ (dust)

Copper (7440-50-8)	
KGVI (kratkotrajna granična vrijednost izloženosti) (mg/m³)	2 mg/m³ (fume and dust)
Czech Republic - Occupational Exposure Limits	
Expoziční limity (PEL) (mg/m³)	1 mg/m³ (dust) 0.1 mg/m³ (fume)
Denmark - Occupational Exposure Limits	
Grænseværdi (8 timer) (mg/m³)	1 mg/m³ (dust and powder) 0.1 mg/m³ (fume)
Estonia - Occupational Exposure Limits	
OEL TWA (mg/m³)	1 mg/m³ (total dust) 0.2 mg/m³ (respirable dust)
Finland - Occupational Exposure Limits	
HTP-arvo (8h) (mg/m³)	0.02 mg/m³ (respirable dust)
France - Occupational Exposure Limits	
VME (mg/m³)	0.2 mg/m³ (fume) 1 mg/m³ (dust)
VLE (mg/m³)	2 mg/m³ (dust)
Greece - Occupational Exposure Limits	
OEL TWA (mg/m³)	0.2 mg/m³ (fume) 1 mg/m³ (dust)
OEL STEL (mg/m³)	2 mg/m³ (dust)
Hungary - Occupational Exposure Limits	
AK-érték	1 mg/m³ 0.1 mg/m³ (fume)
CK-érték	4 mg/m³ 0.4 mg/m³ (fume)
Ireland - Occupational Exposure Limits	
OEL (8 hours ref) (mg/m³)	0.2 mg/m³ (fume) 1 mg/m³ (dusts and mists)

Copper (7440-50-8)	
OEL (15 min ref) (mg/m3)	2 mg/m³ (dusts and mists) 0.6 mg/m³ (calculated-fume)
Latvia - Occupational Exposure Limits	
OEL TWA (mg/m³)	0.5 mg/m³
Lithuania - Occupational Exposure Limits	
IPRV (mg/m³)	1 mg/m³ (inhalable fraction) 0.2 mg/m³ (respirable fraction)
Netherlands - Occupational Exposure Limits	
Grenswaarde TGG 8H (mg/m³)	0.1 mg/m³ (inhalable fraction)
Poland - Occupational Exposure Limits	
NDS (mg/m³)	0.2 mg/m³
Portugal - Occupational Exposure Limits	
OEL TWA (mg/m³)	0.2 mg/m³ (fume) 1 mg/m³ (dust and mist)
Romania - Occupational Exposure Limits	
OEL TWA (mg/m³)	0.5 mg/m³ (powder)
OEL STEL (mg/m³)	0.2 mg/m³ (fume) 1.5 mg/m³ (dust)
Slovakia - Occupational Exposure Limits	
NPHV (priemerná) (mg/m³)	1 mg/m³ (inhalable fraction) 0.2 mg/m³ (respirable fraction)
Slovenia - Occupational Exposure Limits	
OEL TWA (mg/m³)	1 mg/m³ (inhalable fraction) 0.1 mg/m³ (respirable fraction, fume)
OEL STEL (mg/m³)	4 mg/m³ (inhalable fraction) 0.4 mg/m³ (respirable fraction, fume)

Copper (7440-50-8)	
Spain - Occupational Exposure Limits	
VLA-ED (mg/m³)	0.2 mg/m³ (fume) 1 mg/m³ (dust and mist)
Sweden - Occupational Exposure Limits	
nivågränsvärde (NVG) (mg/m³)	0.01 mg/m³ (respirable dust)
United Kingdom - Occupational Exposure Limits	
WEL TWA (mg/m³)	1 mg/m³ (dust and mists) 0.2 mg/m³ (fume)
WEL STEL (mg/m³)	0.6 mg/m³ (calculated-fume) 2 mg/m³ (dust and mist)
Norway - Occupational Exposure Limits	
Grenseverdier (AN) (mg/m³)	0.1 mg/m³ (fume) 1 mg/m³ (dust)
Grenseverdier (Korttidsverdi) (mg/m3)	0.3 mg/m³ (value calculated-fume) 2 mg/m³ (value calculated-dust)
Switzerland - Occupational Exposure Limits	
MAK (mg/m³)	0.1 mg/m³ (inhalable dust)
KZGW (mg/m³)	0.2 mg/m³ (inhalable dust)
USA - ACGIH - Occupational Exposure Limits	
ACGIH TWA (mg/m³)	0.2 mg/m³ (fume)

Graphite (7782-42-5)	
Austria - Occupational Exposure Limits	
MAK (mg/m³)	5 mg/m³ (alveolar dust with <1% Quartz, respirable fraction)
MAK Short time value (mg/m³)	10 mg/m³ (alveolar dust with <1% Quartz, respirable fraction)
Belgium - Occupational Exposure Limits	
Limit value (mg/m³)	2 mg/m³ (except fibers-alveolar fraction)

Graphite (7782-42-5)	
Bulgaria - Occupational Exposure Limits	
OEL TWA (mg/m³)	5 mg/m³ (inhalable fraction)
Croatia - Occupational Exposure Limits	
GVI (granična vrijednost izloženosti) (mg/m³)	4 mg/m³ (respirable dust) 10 mg/m³ (total dust)
Czech Republic - Occupational Exposure Limits	
Expoziční limity (PEL) (mg/m³)	2 mg/m³ (dust)
Denmark - Occupational Exposure Limits	
Grænseværdi (8 timer) (mg/m³)	2.5 mg/m³ (natural-respirable)
Estonia - Occupational Exposure Limits	
OEL TWA (mg/m³)	5 mg/m³ (total dust)
Finland - Occupational Exposure Limits	
HTP-arvo (8h) (mg/m³)	2 mg/m³
France - Occupational Exposure Limits	
VME (mg/m³)	2 mg/m³ (alveolar fraction)
Greece - Occupational Exposure Limits	
OEL TWA (mg/m³)	10 mg/m³ (inhalable fraction) 5 mg/m³ (respirable fraction)
Ireland - Occupational Exposure Limits	
OEL (8 hours ref) (mg/m³)	2 mg/m³ (all forms except fibres; respirable fraction)
OEL (15 min ref) (mg/m3)	6 mg/m³ (calculated-all forms except fibres; respirable fraction)
Latvia - Occupational Exposure Limits	
OEL TWA (mg/m³)	2 mg/m³
Lithuania - Occupational Exposure Limits	
IPRV (mg/m³)	5 mg/m³ (dust)

Graphite (7782-42-5)	
Poland - Occupational Exposure Limits	
NDS (mg/m³)	4 mg/m³ (natural-inhalable fraction) 1 mg/m³ (natural-respirable fraction)
Portugal - Occupational Exposure Limits	
OEL TWA (mg/m³)	2 mg/m³ (all forms except Graphite fibers-respirable fraction)
Romania - Occupational Exposure Limits	
OEL TWA (mg/m³)	2 mg/m³ (Quartz <=5%-dust, respirable fraction)
Spain - Occupational Exposure Limits	
VLA-ED (mg/m³)	2 mg/m³ (see UNE EN 481:1995 on workplace atmospheres-dust; respirable fraction)
United Kingdom - Occupational Exposure Limits	
WEL TWA (mg/m³)	10 mg/m³ (inhalable dust) 4 mg/m³ (respirable dust)
WEL STEL (mg/m³)	30 mg/m³ (calculated-inhalable dust) 12 mg/m³ (calculated-respirable dust)
Norway - Occupational Exposure Limits	
Grenseverdier (AN) (mg/m³)	5 mg/m³ (natural-total dust) 2 mg/m³ (natural-respirable dust) 10 mg/m³ (synthetic-total dust) 4 mg/m³ (synthetic-respirable dust)
Grenseverdier (Korttidsverdi) (mg/m3)	10 mg/m³ (natural-total dust) 4 mg/m³ (natural-respirable dust) 15 mg/m³ (synthetic-total dust) 8 mg/m³ (synthetic-respirable dust)
Switzerland - Occupational Exposure Limits	
MAK (mg/m³)	2.5 mg/m³ (natural-respirable dust) 5 mg/m³ (natural-inhalable dust)
USA - ACGIH - Occupational Exposure Limits	
ACGIH TWA (mg/m³)	2 mg/m³ (all forms except graphite fibers-respirable particulate matter)

8.2. Exposure controls

Appropriate engineering controls:

Ensure good ventilation of the work station. Keep away from food, drink and animal feedingstuffs. Remove immediately contaminated clothing.

Hand protection:
Protective gloves

Eye protection:
Safety glasses

Skin and body protection:
Wear suitable protective clothing

Respiratory protection:
In case of insufficient ventilation, wear suitable respiratory equipment. Wear appropriate mask

Environmental exposure controls:

Avoid release to the environment.

SECTION 9: Physical and chemical properties

9.1. Information on basic physical and chemical properties

Physical state	:	Solid, prismatic
Colour	:	Silver
Odour	:	No data available
Odour threshold	:	No data available
pH	:	No data available
Relative evaporation rate (butylacetate=1)	:	No data available
Melting point	:	No data available

Freezing point	: Not applicable
Boiling point	: No data available
Flash point	: Not applicable
Auto-ignition temperature	: Not applicable
Decomposition temperature	: No data available
Flammability (solid, gas)	: Non flammable.
Vapour pressure	: No data available
Relative vapour density at 20 °C	: No data available
Relative density	: No data available
Solubility	: No data available
Partition coefficient n-octanol/water (Log Pow)	: No data available
Viscosity, kinematic	: No data available
Viscosity, dynamic	: No data available
Explosive properties	: Non explosive.
Oxidising properties	: No data available
Explosive limits	: Not applicable
Other information:	
Voltage	: 3.2V
Electric capacity	: 10Ah
Electric energy	: 32Wh

9.2. Other information

No additional information available

SECTION 10: Stability and reactivity

10.1. Reactivity

The product is non-reactive under normal conditions of use, storage and transport.

10.2. Chemical stability

Stable under normal conditions.

10.3. Possibility of hazardous reactions

No dangerous reactions known under normal conditions of use.

10.4. Conditions to avoid

Heat, flames and sparks. Incompatible materials.

10.5. Incompatible materials

Oxidizing agent. acid. Bases.

10.6. Hazardous decomposition products

Carbon monoxide. Carbon dioxide (CO_2). Lithium oxide flumes.

SECTION 11: Toxicological information

11.1. Information on toxicological effects

Acute toxicity (oral)	: Not classified
Acute toxicity (dermal)	: Not classified
Acute toxicity (inhalation)	: Not classified
Skin corrosion/irritation	: Not classified pH: No data available
Serious eye damage/irritation	: Not classified pH: No data available
Respiratory or skin sensitisation	: Not classified
Germ cell mutagenicity	: Not classified
Carcinogenicity	: Not classified
Reproductive toxicity	: Not classified
STOT-single exposure	: Not classified
STOT-repeated exposure	: Not classified
Aspiration hazard	: Not classified

SECTION 12: Ecological information

12.1. Toxicity

Ecology - general	: The product is not considered harmful to aquatic organisms nor to cause long-term adverse effects in the environment.
Hazardous to the aquatic environment, short-term (acute)	: Not classified
Hazardous to the aquatic environment, long-term (chronic)	: Not classified

Copper (7440-50-8)	
LC50 fish 1	0.0068 – 0.0156 mg/l (Exposure time: 96 h - Species: Pimephales promelas)
LC50 fish 2	< 0.3 mg/l (Exposure time: 96 h - Species: Pimephales promelas [static])
EC50 Daphnia 1	0.03 mg/l (Exposure time: 48 h - Species: Daphnia magna [Static])
EC50 72h algae (1)	0.0426 – 0.0535 mg/l (Species: Pseudokirchneriella subcapitata [static])
EC50 96h algae (1)	0.031 – 0.054 mg/l (Species: Pseudokirchneriella subcapitata [static])

12.2. Persistence and degradability

No additional information available

12.3. Bioaccumulative potential

No additional information available

12.4. Mobility in soil

No additional information available

12.5. Results of PBT and vPvB assessment

No additional information available

12.6. Other adverse effects

No additional information available

SECTION 13: Disposal considerations

13.1. Waste treatment methods

Waste treatment methods	: Dispose of contents/container in accordance with licensed collector's sorting instructions.

SECTION 14: Transport information

In accordance with ADR / RID / IMDG / IATA / ADN

ADR	IMDG	IATA	ADN	RID
14.1. UN number				
UN 3480	UN 3480	UN 3480	UN 3480	UN 3480
14.2. UN proper shipping name				
LITHIUM ION BATTERIES	LITHIUM ION BATTERIES	Lithium ion batteries	LITHIUM ION BATTERIES	LITHIUM ION BATTERIES
Transport document description				
UN 3480 LITHIUM ION BATTERIES, 9A, (E)	UN 3480 LITHIUM ION BATTERIES, 9	UN 3480 Lithium ion batteries, 9A	UN 3480 LITHIUM ION BATTERIES, 9A	UN 3480 LITHIUM ION BATTERIES, 9A
14.3. Transport hazard class(es)				
9A	9A	9A	9A	9A
14.4. Packing group				
Not applicable	Not applicable	Not applicable	Not applicable	Not applicable
14.5. Environmental hazards				
Dangerous for the environment : No	Dangerous for the environment : No Marine pollutant : No	Dangerous for the environment : No	Dangerous for the environment : No	Dangerous for the environment : No
No supplementary information available				

14.6. Special precautions for user

Overland transport

Classification code (ADR)	: M4
Special provisions (ADR)	: 188, 230, 310, 348, 376, 377, 387, 636
Limited quantities (ADR)	: 0
Excepted quantities (ADR)	: E0
Packing instructions (ADR)	: P903, P908, P909, P910, LP903, LP904
Transport category (ADR)	: 2
Tunnel restriction code (ADR)	: E
EAC code	: 4W

Transport by sea

Special provisions (IMDG)	: 188, 230, 310, 348, 376, 377, 384
Packing instructions (IMDG)	: P903, P908, P909 , P910, LP903, LP904
EmS-No. (Fire)	: F-A
EmS-No. (Spillage)	: S-I
Stowage category (IMDG)	: A
Stowage and handling (IMDG)	: SW19
Properties and observations (IMDG)	: Electrical batteries containing lithium ion encased in a rigid metallic body. Lithium ion batteries may also be shipped in, or packed with, equipment. Electrical lithium batteries may cause fire due to an explosive rupture of the body caused by improper construction or reaction with contaminants.

Air transport

PCA Excepted quantities (IATA)	: E0
PCA Limited quantities (IATA)	: Forbidden
PCA limited quantity max net quantity (IATA)	: Forbidden
PCA packing instructions (IATA)	: Forbidden
PCA max net quantity (IATA)	: Forbidden
CAO packing instructions (IATA)	: See 965
CAO max net quantity (IATA)	: See 965
Special provisions (IATA)	: A88, A99, A154, A164, A183, A201, A206, A213, A331, A334, A802
ERG code (IATA)	: 12FZ

Inland waterway transport

Classification code (ADN)	: M4

Special provisions (ADN)	: 188, 230, 310, 348, 376, 377, 387, 636
Limited quantities (ADN)	: 0
Excepted quantities (ADN)	: E0
Equipment required (ADN)	: PP
Number of blue cones/lights (ADN)	: 0

Rail transport

Classification code (RID)	: M4
Special provisions (RID)	: 188, 230, 310, 348, _376, 377, 387, 636
Limited quantities (RID)	: 0
Excepted quantities (RID)	: E0
Packing instructions (RID)	: P903, 908, 909, P910, P911, LP903, LP904, LP905, LP906
Transport category (RID)	: 2
Colis express (express parcels) (RID)	: CE2
Hazard identification number (RID)	: 90

14.7. Transport in bulk according to Annex II of Marpol and the IBC Code

Not applicable

SECTION 15: Regulatory information

15.1. Safety, health and environmental regulations/legislation specific for the substance or mixture

15.1.1. EU-Regulations

Contains no substance on the REACH candidate list

Contains no substance subject to Regulation (EU) No 649/2012 of the European Parliament and of the Council of 4 July 2012 concerning the export and import of hazardous chemicals.

Contains no substance subject to Regulation (EU) No 2019/1021 of the European Parliament and of the Council of 20 June 2019 on persistent organic pollutants

15.1.2. National regulations

Germany

Employment restrictions	: Observe restrictions according Act on the Protection of Working Mothers (MuSchG) Observe restrictions according Act on the Protection of Young People in Employment (JArbSchG)
Water hazard class (WGK)	: WGK nwg, Non-hazardous to water (Classification according to AwSV, Annex 1)
Hazardous Incident Ordinance (12. BImSchV)	: Is not subject of the Hazardous Incident Ordinance (12. BImSchV)

Netherlands

SZW-lijst van kankerverwekkende stoffen	: None of the components are listed
SZW-lijst van mutagene stoffen	: None of the components are listed
NIET-limitatieve lijst van voor de voortplanting giftige stoffen – Borstvoeding	: None of the components are listed
NIET-limitatieve lijst van voor de voortplanting giftige stoffen – Vruchtbaarheid	: None of the components are listed
NIET-limitatieve lijst van voor de voortplanting giftige stoffen – Ontwikkeling	: None of the components are listed

15.2. Chemical safety assessment

No chemical safety assessment has been carried out

SECTION 16: Other information

Abbreviations and acronyms:	
ADN	European Agreement concerning the International Carriage of Dangerous Goods by Inland Waterways
ADR	European Agreement concerning the International Carriage of Dangerous Goods by Road
ATE	Acute Toxicity Estimate
BLV	Biological limit value
CAS-No.	Chemical Abstract Service number
CLP	Classification Labelling Packaging Regulation; Regulation (EC) No 1272/2008
DMEL	Derived Minimal Effect level
DNEL	Derived-No Effect Level
EC50	Median effective concentration
EC-No.	European Community number
EN	European Standard
IATA	International Air Transport Association
IMDG	International Maritime Dangerous Goods

LC50	Median lethal concentration
LD50	Median lethal dose
LOAEL	Lowest Observed Adverse Effect Level
NOAEC	No-Observed Adverse Effect Concentration
NOAEL	No-Observed Adverse Effect Level
NOEC	No-Observed Effect Concentration
OEL	Occupational Exposure Limit
PBT	Persistent Bioaccumulative Toxic
PNEC	Predicted No-Effect Concentration
REACH	Registration, Evaluation, Authorisation and Restriction of Chemicals Regulation (EC) No 1907/2006
RID	Regulations concerning the International Carriage of Dangerous Goods by Rail
SDS	Safety Data Sheet
vPvB	Very Persistent and Very Bioaccumulative
WGK	Water Hazard Class

Data sources : Loli. ECHA reference.

Training advice : Normal use of this product shall imply use in accordance with the instructions on the packaging.

Classification according to Regulation (EC) No. 1272/2008 [CLP]:	
Not classified	

Full text of H- and EUH-statements:	
Flam. Sol. 1	Flammable solids, Category 1
Water-react. 2	Substances and Mixtures which, in contact with water, emit flammable gases, Category 2
H228	Flammable solid.
H261	In contact with water releases flammable gases.

SDS EU (REACH Annex II)

This information is based on our current knowledge and is intended to describe the product for the purposes of health, safety and environmental requirements only. It should not therefore be construed as guaranteeing any specific property of the product.

Blank Page

Shire Electric Outboard Registration Form

Owner Name: **Address:** **Tel:** **Email:**	**Dealer Name:** **Address:** **Tel:** **Email:**
Product Model:	**Serial Number:**
Rental Use: Yes/No	**Location:**
Date of Delivery:	
Owner signature:	**Dealer signature:**
Please return this form by post to: **Special Products Division Warranty** **E. P. Barrus Ltd** **Glen Way,** **Launton Road,** **Bicester,** **Oxfordshire,** **OX26 4UR** **OR by email to: Richard.Cooke@barrus.co.uk**	

Please keep a copy of the form for your own records.