SHIRE CANAL ENGINE MANUAL

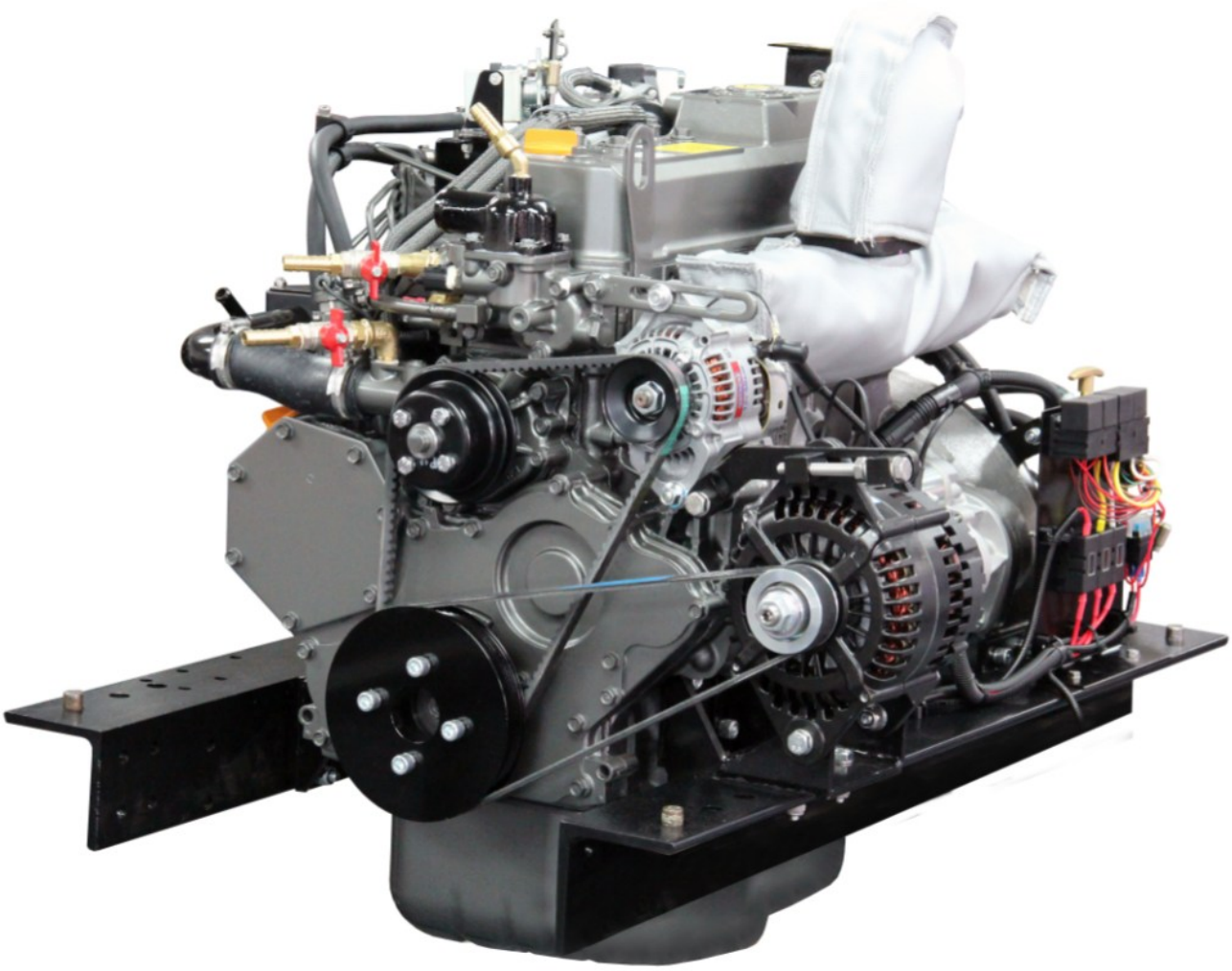

For the following engine model*:

Shire 70

*Standard Model, there may be a number of optional extras, or alternative components, that might be fitted to an engine that are not shown in this book.

RDG603A26 – Issue 21

SAFETY

E.P. Barrus is concerned for your safety. We use safety statements throughout the manual to call your attention to the potential hazards associated with the operation of your Shire engine.

Follow the precautions listed throughout the manual before operation, during operation and during servicing/maintenance procedures for your safety, the safety of others and to protect the performance of your engine.

Safety alert symbol appears throughout the manual. It means attention, be alert as your safety is involved. Please read and follow the message that appears after the safety alert symbol.

NOTICE:	This indicates a situation which can cause damage to the machine, personal property and/or the environment or cause the equipment to operate improperly
CAUTION:	This indicates a hazardous situation which, if not avoided, could result in minor or moderate injury.
WARNING:	This indicates a hazardous situation which, if not avoided, could result in death or serious injury.
DANGER:	This indicates a hazardous situation which, if not avoided, will result in death or serious injury.

Engine Details

Engine Serial Number:	

If there is no sticker with engine details on here, please enter your engine serial number in the space provided above. Please quote the engine identification number during any enquiry or when ordering spare parts. Information about the engine serial number and its location on the engine can be found in **SECTION 2** of the manual.

Shire Engine Manuals and Shire Parts Books

SCAN ME

To access the complete Shire Engine Manuals and Shire Parts Books on the internet type the following short links into your search engine or just scan the QR code above.

https://shireshop.co.uk/ - Shire Shop
https://www.barrus.co.uk/shire-manuals/ - Complete Shire Engine Manuals
https://www.barrus.co.uk/shire-parts/ - Shire Parts Books

NOTICE:

THIS MANUAL FORMS AN INTEGRAL PART OF THE ENGINE IT ACCOMPANIES, IF A TRANSFER OF TITLE OCCURS, IT MUST ALWAYS BE HANDED OVER TO THE NEW OWNER.

Thank you for purchasing this Shire Canal Boat Marine Engine from E.P.Barrus. This manual has been compiled to help you to operate your engine and its associated parts with safety and pleasure. Please read it carefully in conjunction with the Yanmar Manuals and familiarise yourself with the engine and its parts before operation. The PRM Gearbox Manual is available from the PRM website:

www.prm-newage.com

If the engine is fitted with an E-Kit and/or Hybrid options, please also read the supplied manuals for them carefully.

The information and recommendations given in this manual are based on the latest information available at the time of publication. E.P.Barrus reserve the right to change the specification of its products and manuals without prior notice.

Depending upon the equipment specification of the engine and accessories fitted, there may be discrepancies with the information presented in this handbook. No claims may be pursued in this respect.

WARRANTY

The Shire UK Limited Warranty provides coverage for up to five years or 2000 hours (whichever occurs first) for recreational users and three years or 2000 hours (whichever occurs first) for commercial users from the date of warranty commencement. This is dependent on the following conditions.

This covers the majority of Shire Engine components with the exception of the items as stated in this document.

To ensure that you have been registered for your warranty, please fill in the separate form supplied with the engine.
Return it to the address given or email it to Richard.Cooke@barrus.co.uk
The Warranty will only apply if the following have been carried out and the registration form has been completed and returned to Barrus.

The warranty period begins when either the owner registers the engine or it is triggered automatically. A discretionary period of 6 months is given following the delivery of the engine (to allow for installation and commissioning), following this the warranty period will automatically start.

The repair or replacement of parts, or the performance of service under this warranty, does not extend the life of this warranty beyond its original expiry date.

TERMS

It is the responsibility of the boat builder or owner to ensure the Shire Engine is registered for warranty.

The Warranty will only apply if the following have been carried out:

- The installation is in full compliance with the requirements defined in the manual and the checklist completed and signed by the engine installer.
- A copy of completed engine installation checklist accompanies the warranty registration form, and then are returned to Barrus as above.
- The boat builder or engine installer has completed the Boat Builder Section on the Service Record Card (located at the back of the manual) regarding hand over and commissioning of boat.
- The engine and ancillary systems are installed in compliance with current and applicable national and international standards.
- The maintenance has been completed to the full requirements, using genuine parts and recorded in the manual.

SAFETY

E.P Barrus staff or their representatives can only carry out warranty repairs if there is suitable and safe access to the boat and engine room or compartment.

PRM GEARBOXES

PRM Gearboxes are covered by a three year warranty for recreational users and two years for commercial users.

ELECTRICAL SYSTEMS

Shire Engine alternators, starter motor and electrical components are subject to a limited one year warranty.

FUEL SYSTEMS

Fuel injection and supply equipment including the injectors and pump(s) are subject to a limited one year warranty.

It is a condition of the warranty that a separate water trap is fitted between the fuel tank and the engine fuel lines (in addition to the filters fitted to the engine). This water trap should be drained and cleaned at normal engine service intervals. The fuel tank should always be kept clear of dirt, water and any other contamination. It is not recommended that the fuel tank be run completely empty as this will induce air into the fuel system and can cause fuel injection or starting system damage- which would not be covered by the warranty.

Upon installation the fuel system should be pressure or vacuum tested to ensure no leaks are present. Poor quality fuel systems can cause engine fuel injection system damage which is not covered by the warranty. The fuel system should be fully primed ahead of engine starting; failure to do so can cause damage to the engine starting system and fuel system components- this damage is not covered by the warranty.

POOR QUALITY FUEL

Poor running (including smoking) engines that are being run (or have been run) on low quality or contaminated fuel are not covered by the warranty. Any replacement parts that are required as a consequence of using incorrect or low quality fuel are not covered by warranty.

There have been recent problems with fuel termed as sticky diesel or cloudy diesel, where the FAME (Fatty Acid Methyl Esters) content of the fuel has increased over recent years. This makes it more hygroscopic (attracts moisture) than previous blends and acts as a detergent (cleaning dirt from fuel system components such as tanks, pipes etc. and carrying it into the fuel). This combines to cause issues with fuel system components such as sticking or seizing, poor starting, poor running and smoking. In these situations, fuel tanks should be drained, flushed and refilled with fresh fuel. Also an option, an additional filter assembly with a 1 micron filter rating can be fitted to alleviate this problem, both by improved filtering and also removal of any small particles of moisture absorbed in the fuel that have got past the normal fuel water traps. This problem is not to be confused with the Diesel Bug, that is a separate problem than can also occur in boat fuel systems. Fuel problems of this and other types are not covered by engine warranty.

Engine and fuel equipment is not covered by warranty if bio-diesel that does not comply with EN15940 is used (See 5. Refuelling of Section 6 – Operation).

Only fuel fully compliant with EN590 or EN15940 should be used in Shire Engines. Failure to comply with this may invalidate the warranty.

CONDITIONS THAT MUST BE MET IN ORDER TO OBTAIN WARRANTY COVERAGE

Warranty coverage is only available from EP Barrus Ltd. Routine maintenance outlined in the Owner's Manual must be performed using genuine parts in order to maintain warranty coverage. If the customer performs maintenance to an insufficient level, Barrus reserves the right to withdraw warranty coverage.

WARRANTY CLAIMS

Warranty claims must be made by either an authorised dealer or directly to EP Barrus.

The dealer or boat builder will arrange for the inspection and any necessary repairs. If the repairs carried out are not covered by the warranty, the purchaser shall pay for all related labour and material, and any other expenses associated with that service.

Any claim should be made as soon as possible, and no later than two weeks after the initial discovery of the defect. No agent outside the EP Barrus Ltd network should be instructed to carry out work before the defect has been reported and agreement made with EP Barrus Ltd.

WHAT IS NOT COVERED

This limited warranty does not cover the following:

- Routine maintenance and service items,
- Adjustments,
- Normal wear and tear,
- Damage caused by abnormal, incorrect or improper use,
- Operation of the product in a manner inconsistent with the recommended operation/duty cycle,
- Accident, submersion,
- Improper installation (i.e. an installation not consistent with the requirements laid out),
- Systems using or affected by an accessory or part not manufactured or sold by EP Barrus Ltd,
- Systems that have been altered or modified (including addition of electrical systems such as charge boosters or other electrical management products),
- Expenses related to crane-out, launch, towing, storage, telephone, rental, inconvenience, slip fees, insurance coverage, loan payments, loss of time, loss of income, or any other types of accidental or consequential loss or damages,

Engine and engine starting systems are not covered by warranty if it is found that the engine start battery or supply circuit/system is not of the correct specification. Or if the engine start battery is partially or fully discharged.

Damage due to rust or corrosion, submersion, or unreasonable exposure to the environment, such as exposure to high humidity, rain fall, or seawater, or conditions resulting in the freezing of cooling water are not covered.

Water ingression of any kind into the engine via any means (other than the cooling system) will void the warranty. It is the responsibility of the owner/installer to ensure that no water can enter the engine during use or storage.

CHARGING LITHIUM-ION BATTERIES

The standard alternators fitted to Shire Engines are not suitable for charging lithium-ion batteries. If the standard alternators are used for charging lithium-ion batteries, they will not be covered under warranty. If lithium-ion batteries are to be used a specialist alternator will be required.

IMPROPER USE

To ensure ongoing and reliable operation, Engines should not be left without running for periods of more than two weeks at any one time. If not required to run, every two weeks the engine should be started and run under load until correct operating temperature is reached - this should then be maintained for a minimum of 15 minutes.

Engines that are installed in boats that are used as primary living accommodation and spend large amounts of time running at low speeds and low loads solely to charge batteries and heat water, longer term will suffer from problems associated with this type of use. Problems that arise from this type of improper use are not covered by warranty. Larger output alternators, additional alternators and twin thermostat systems are available that will increase the load on the engine, which in turn will charge batteries and heat up water quicker and will reduce the running time. Alternatively, a standalone generator or connection to a shore-based mains voltage land line should be used.

Note: Domestic battery bank size in Section 5: Item 18.

TRANSFER OF WARRANTY

The warranty is valid for the first owner of the Shire engine and is transferrable only at the discretion of EP Barrus Ltd.

DELIVERY

Damage caused during transport (or before delivery) must be reported to the courier and the delivery signed for highlighting it. Failure to do so may result in the damage not being covered.

Any parts missing from a delivery should be reported to EP Barrus within 3 working days. Photographs of the shipment including packaging will be required.

Note: Engines and ancillary parts are photographed, recorded and stored prior to shipment to the customer.

River Canal Rescue Membership

RCR offer a number of support packages and services to give the inland boater peace of mind in the event of an incident, breakdown or emergency. They offer year-round 24/7 national breakdown and recovery assistance for members on the inland waterways as well as a range of servicing, maintenance and repair support.

Please see RCR leaflet included with the other engine documents for more details. The leaflet is stamped and RCR will offer a first year 20% discount to all new Shire engine owners. To gain this discount please call RCR on 01785785680. Please have ready to hand your Shire warranty registration date.

Note: This does not affect the Shire engine warranty.

Index

Page

SECTION 1 – Safety Precautions 14

1. General 14

2. Lifting 14

3. Rotating Shafts and Belts 15

4. Exhaust System 15

5. Launching and Lifting Boats 16

6. Batteries 16

SECTION 2 – Engine Identification 17

SECTION 3 – Component Identification 18

1. Shire 70 18

SECTION 4 – Control Panel 19

1. Standard Control Panel 19

2. Deluxe Control Panel 19

3. Control Panel Overview 20

4. Warning Light Procedure 20

5. Overall Dimensions of the Standard Control Panel 22

6. Overall Dimensions of the Deluxe Control Panel 22

SECTION 5 – Installation 23

1. Ventilation 23

2. Engine Beds 23

3. Cooling System 23

4. Skin Tanks 24

5. Engine Cooling Water Inlet and Outlet Hose Connections 25

6. Pressurised Water Header Tank 25

7. Shaft Connection and Propeller Selection 27

8. Engine Anti-Vibration Mounts 27

9. Engine Alignment 30

10. Engine Inclination 30

11. Electrics 31
12. Electrical Options 32
13. Engine Oil 32
14. Fuel 33
15. Coolant 34
16. Calorifier 35
17. Control Cables 35
18. Domestic Battery Bank 36
19. Control Panel 37
20. Exhaust System 38
21. Hydraulic Drive Transmissions 39
22. Hydraulic Pump Drive Option (Shire 70) 40
23. PRM 280DP Gearbox with Power Take Off (Option - RDG914A198) 40
24. Engine Start Battery 40
25. Installation Check List ....Error! Bookmark not defined.
SECTION 6 – Operation 41
1. Starting the engine for the first time 41
2. Starting Procedure 41
3. Stopping Procedure 42
4. Full Load Running 42
5. Refuelling 42
6. Diesel Fuel Additive 43
7. Exhaust Back Pressure 43
8. Hybrid System (For engine with Hybrid System fitted) 43
9. Single Lever Side Mount Operation - Optional (RDG9210055) 44
10. Shifting in and out of gear 44
SECTION 7 – Service Procedure 45
1. Engine Oil and Filter Change 45
2. Air Filter Check and Change 46
3. Gearbox Oil Change 46

4. Disposal of Oil and Related Items 47
5. Primary Fuel Filter Drain (RDG9188346) 48
6. Primary Fuel Filter Change 49
7. Secondary Fuel Filter Change 49
8. Fuel System Bleeding 50
9. Cooling System 50
10. Belt Adjustment 51
11. Belt Maintenance 51
12. Belt Replacement 52
13. Control Panel Maintenance 53
SECTION 8 – Service Schedule 54
1. Specifications and Capacities 54
2. Service Intervals 55
SECTION 9 – Wiring Diagrams 56
1. Engine Wiring Diagram Shire 70 56
2. Standard Control Panel Wiring Diagram 57
3. Deluxe Control Panel Wiring Diagram 58
4. Prestolite 24 Volt 120 Amp Alternator Wiring Diagram 59
SECTION 10 – Technical Data 61
1. Engine Data 61
2. Return Diesel System 61
3. Dry Weight of Engine Data 61
SECTION 11 – Fault Diagnosis 62
1. Failure Indicator Flashing Pattern 62
2. Examples Of Fault Code Light Sequences 62
3. Fault Codes 64
SECTION 12 – Dealer List 66
SECTION 13 – Shire Service Parts 68
SECTION 14 – Afterlife Recycling 70
SECTION 15 – Declarations 71

1. Declaration of Conformity for Recreational Craft Propulsion Engine with the requirements of Directive 2013/53/EU.....71

2. Declaration of Conformity for Recreational Propulsion Engine with the requirements of the Recreational Craft Regulations 2017 (UKCA Marking).....72

3. Declaration of Incorporation of Partly Completed Machinery 73

4. EU Declaration of Conformity with the Exhaust Emissions Requirements of Directive 2013/53EU 74

SECTION 16 – Shire Service Record Card.....75

SECTION 1 – Safety Precautions

1. General

NOTICE:

NEVER PERMIT ANYONE TO OPERATE THE ENGINE WITHOUT PROPER TRAINING.

It is the responsibility of the installer/operator to ensure that the finished installation complies with CE Marking, UKCA Marking, relevant Health & Safety Requirements, the Recreational Craft Directive, the Recreational Craft Regulations and or any other legislative requirements before commissioning.

Ensure that the engine battery isolator switch is in the off position and the key removed from the control panel before carrying out any maintenance or repairs.

Ensure that all installations and boat alterations comply with any appropriate local, regional, national or international regulations. When installing new propulsion systems (that are not identical to the original ones), or major craft conversions into existing craft, a new vessel Post Construction Assessment will be required, and carried out by an independent notified body.

Also, when installing a new engine in an old boat ensure that the fuel tank and fuel system are completely drained and flushed out as well as the cooling and calorifier systems and the skin tanks. Problems arising from this will not be covered by warranty.

2. Lifting

DANGER:

CRUSH HAZARD! NEVER STAND UNDER A HOISTED ENGINE. IF THE HOIST MECHANISM FAILS, THE ENGINE WILL FALL ON YOU, CAUSING SERIOUS INJURY OR DEATH.

The Lifting points supplied with the engine are for lifting the engine/gearbox only. A suitable spreader bar must be employed to prevent over-stressing either bracket during any lift.

3. Rotating Shafts and Belts

WARNING:

SEVERE HAZARD! KEEP HANDS AND OTHER BODY PARTS AWAY FROM MOVING/ROTATING PARTS. WEAR TIGHT FITTING CLOTHING AND KEEP YOUR HAIR SHORT OR TIE BACK. REMOVE ALL JEWELLERY BEFORE COMMENCING WORK. CHECK BEFORE STARTING THE ENGINE THAT ANY TOOLS OR RAGS USED DURING MAINTENANCE HAVE BEEN REMOVED FROM THE AREA.

The engine and its accessories are not intended to be put into operation until they are integrated into the boat as a whole. No person should be in the engine compartment and the engine cover or deck hatches should be closed whilst the engine is running.

4. Exhaust System

WARNING:

EXHAUST HAZARD! NEVER OPERATE ENGINE IN A BOATS ENGINE BAY WITHOUT PROPER VENTILATION. NEVER BLOCK VENTS OR OTHER MEANS OF VENTILATION. ALL COMBUSTION ENGINES CREATE CARBON MONOXIDE GAS DURING OPERATION. ACCUMULATION OF THIS GAS COULD CAUSE ILLNESS OR EVEN DEATH.

WARNING:

BURN HAZARD! WAIT UNTIL THE EXHAUST COOLS BEFORE YOU TOUCH IT.

Exhaust gases may have temperatures as high as 650°C and contain elements which are harmful if ingested.
It is therefore essential that exhaust systems are gas tight and lagged to prevent accidental burning and inhalation of exhaust gases when inside the boat cabin.

5. Launching and Lifting Boats

Care must be taken when launching or craning new boats into or out of the waterway, so that water does not enter the engine via the exhaust system or air vents. It is recommended that these are blocked temporarily whilst undertaking this procedure.

6. Batteries

DANGER:

EXPLOSION HAZARD! NEVER SHORT OUT THE BATTERY TERMINALS, INCLUDING WHEN CHECKING THE REMAINING BATTERY CHARGE THIS WILL RESULT IN A SPARK AND MAY CAUSE AN EXPLOSION OR FIRE.

WARNING:

BURN HAZARD! BATTERIES CONTAIN SULPHURIC ACID. NEVER ALLOW BATTERY FLUID TO COME IN CONTACT WITH SKIN, EYES OR CLOTHING. SEVERE BURNS COULD RESULT. MAKE SURE THE CORRECT PERSONAL PROTECTION EQUIPMENT IS WORN.

- Batteries can produce explosive gases; keep sparks and flames away from the battery.

NO SMOKING

- Batteries contain sulphuric acid; if splashed on skin or eyes, flush well with water and seek medical advice.
- Keep battery tops and battery compartment ventilated at all times
- If disconnecting the battery; remove the earth lead **FIRST**; and re-connect it last.
- If charging the battery; ensure that the charger is switched off before connecting and disconnecting.
- Do not tip the battery on its side.
- Please see label on battery or manufacturer's instructions for specific information.
- Make sure the start battery fitted is of the correct recommended capacity as stated in **1. Engine Data of Section 10 - Technical Data.** If an incorrectly sized battery in fitted the ECU may not work and the engine may fail to start.
- Always make sure the start battery is fully charged. If the battery in not fully charged the ECU may not work and the engine may fail to start.

SECTION 2 – Engine Identification

The engine serial number can be found engraved into the brass plate on the top of the engine rocker cover. The Canal Boat Engines (CB) do not have identification initials on the engraved plate.

An example of the engine identification plate is shown below (**Figure 1**):

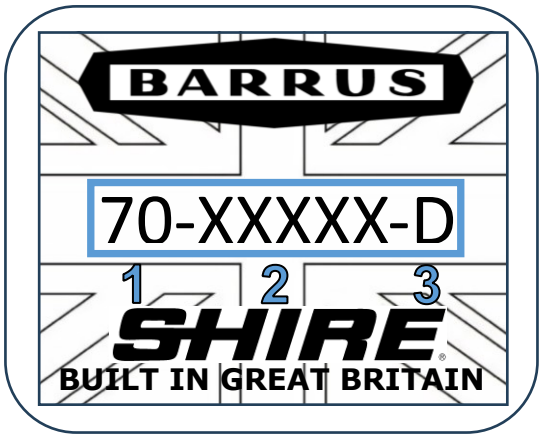

	Description
1	Engine Model
2	Serial Number
3	Indicates Model Type or Optional Extras: RB = River Boat WB = Work Boat D = Deluxe Panel 3 = 3:1 Ratio Gearbox

Figure 1: Engine Identification Badge

Description of Models:

Abbreviation	Type of Engine	Description*
CB	Canal Boat	Keel cooled dry exhaust manifold
WB	Work Boat	Seawater/Heat Exchanger cooled, dry exhaust manifold with either a dry exhaust system (same as a Canal Boat) or water injected exhaust system. Can also be used for sea going applications

***Note**: There are a number of other optional extras that may be fitted to an engine that are not listed here.

A list of common item service part numbers can be found in **Section 13**, Shire Service Parts.

SECTION 3 – Component Identification

1. Shire 70

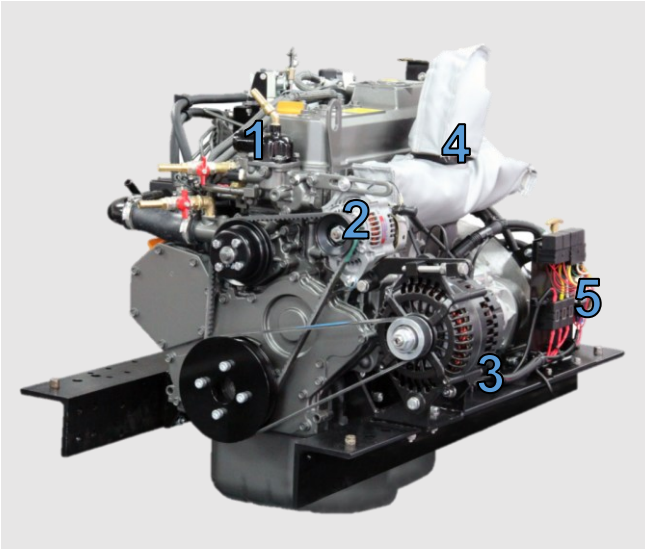

Figure 2: Shire 70 Left Side (Viewed from front)

	Description*
1	Single Thermostat Housing
2	50 Amp 12 Volt Alternator
3	240 Amp 12 Volt Alternator
4	Dry Exhaust
5	Relay and Fuse Holder

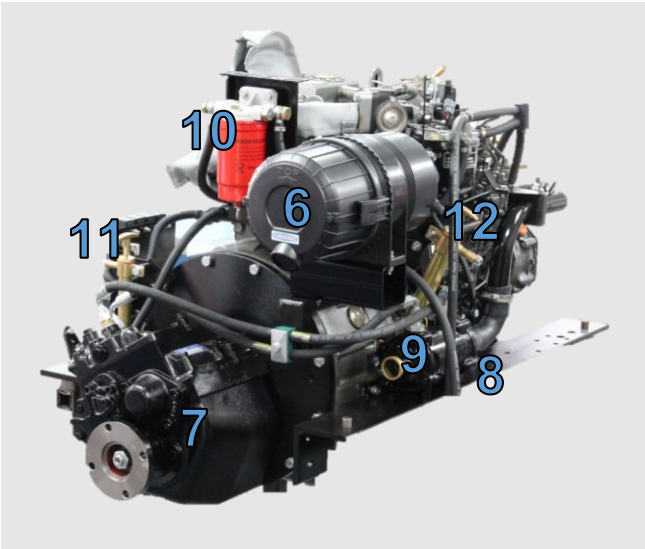

Figure 3: Shire 70 Right Side (Viewed from rear)

	Description*
6	Air Filter
7	Gearbox
8	Oil Filter
9	Oil Cooler
10	Primary Fuel Filter
11	Gearbox Drain Pump
12	Engine Sump Pump

***Note**: There are a number of other optional extras that may be fitted to an engine that are not shown here.

SECTION 4 – Control Panel

1. Standard Control Panel

Figure 4: Standard Control Panel

	Description
1	Tachometer Gauge
2	Hour Meter
3	Water Temperature Warning Light
4	Oil Pressure Warning Light
5	50A Alternator Charge Warning Light
6	150/240A Alternator Charge Warning Light
7	Glow Plug Light
8	Key Flap and Ignition Switch

2. Deluxe Control Panel

Figure 5: Deluxe Control Panel

	Description
1	Tachometer Gauge
2	Hour Meter
3	Water Temperature Warning Light
4	Oil Pressure Warning Light
5	50A Alternator Charge Warning Light
6	150/240A Alternator Charge Warning Light
7	Glow Plug Light
8	Key Flap and Ignition Switch
9	50A Alternator Output Gauge
10	Oil Pressure Gauge
11	Water Temperature Gauge

3. Control Panel Overview

- All Shire engines are supplied with a control panel.
- Depending on the model of Shire engine, the control panel will either be a standard control panel or a deluxe control panel. The following table shows which panel comes with each type of engine as standard. Please note that on certain Shire engines a different type of control panel can be ordered as an option.

Engine	Control Panel Supplied*
Shire 70	Deluxe Control Panel

* Panel supplied as standard. On certain engines a different control panel may be supplied as an option

4. Warning Light Procedure

- When the ignition is first turned on, the control panel warning lights will come on as a bulb check. When the engine is started the warning lights will go out. Please note that the water temperature warning light and glow plug light operate slightly differently.

- The water temperature warning light will only come on for a brief period of time when the ignition is first turned on as a bulb check. It will then only illuminate in the case of the engine coolant temperature exceeding the maximum safety level.

- The glow plug light will come on when the ignition is first turned on for 5 – 6 seconds to indicate the heating system is operational. When the light goes out the engine can be started.

- Whilst the control panel is in operation all the gauges are backlit. This does not indicate a fault and is a normal function for the control panel.

- If any of the warning lights on the control panel come on **whilst** the engine is running, please follow the correct procedure as shown in the following table.

In the event of a fault, only trained and qualified personnel should undertake repairs on the engine

	Description	Procedure for Warning Light
1	Tachometer Gauge	-
2	Hour Meter	-
3	Water Temperature Warning Light	Reduce the engine revs and stop the engine within one or two minutes. Check the coolant level (refer to **9. Cooling System of SECTION 7 - SERVICE PROCEDURE**). If the coolant level is incorrect, fill it to the correct level (refer to **9. Cooling System of SECTION 7 - SERVICE PROCEDURE**) and restart the engine. If the coolant level is correct and the fault is still present, or there is a coolant leak, please contact your local dealer.
4	Oil Pressure Warning Light	Stop the engine immediately. Contact your local dealer. Failure to stop the engine may result in permanent engine damage.
5	50A Alternator Charge Warning Light	This indicates that the alternator has stopped charging. The engine can still be operated for a short period of time. Contact your local dealer.
6	150/240A Alternator Charge Warning Light*	This indicates that the alternator has stopped charging. The engine can still be operated for a short period of time. Contact your local dealer.
7	Glow Plug Light	This indicates that the cold start system is operating. If the light fails to illuminate during the starting procedure contact your local dealer.
8	Key Flap and Ignition Switch	-
9	50A Alternator Output Gauge	-
10	Oil Pressure Gauge	-
11	Water Temperature Gauge	-

*Only applicable if a second alternator is fitted to the engine

5. Overall Dimensions of the Standard Control Panel

(All Dimensions are in mm)

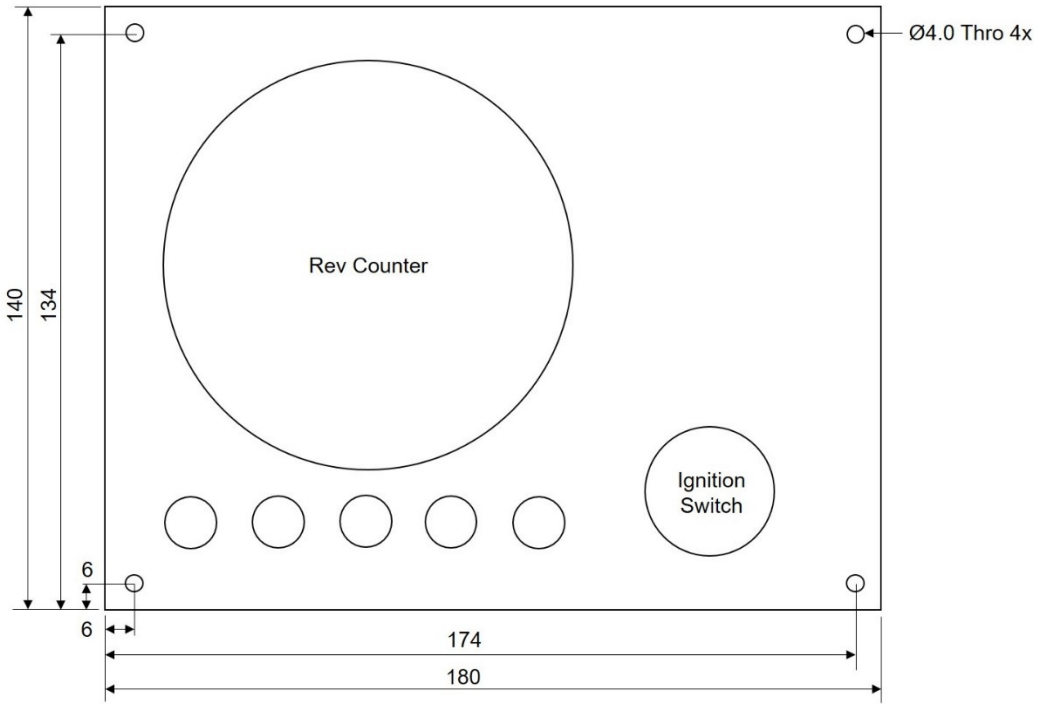

Figure 6: Standard Control Panel Dimensions

6. Overall Dimensions of the Deluxe Control Panel

(All Dimensions are in mm)

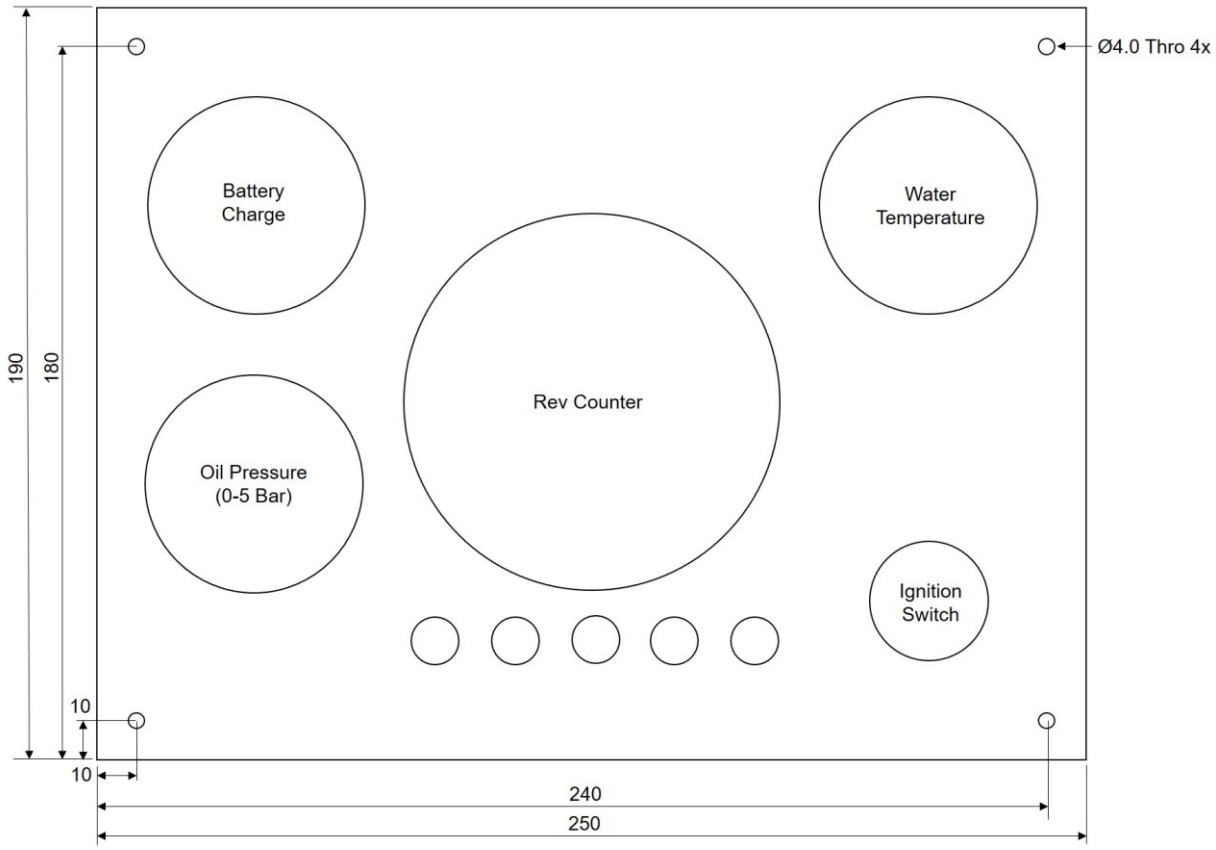

Figure 7: Deluxe Control Panel Dimensions

SECTION 5 – Installation

NOTICE:

REFER TO THE SHIRE AND YANMAR MANUALS PRIOR TO INSTALLING THE ENGINE.

1. **Ventilation**

- All internal combustion engines radiate heat and require cool, clean air to aid complete combustion.
- Please ensure that adequate engine room ventilation is provided, by fitting at least two vents of an aperture of not less than 15,000mm^2 each (24in^2).

An allowance must be made for any grills, louvres or bends placed in the airflows and generally an increase of 25% in area is sufficient to overcome any restriction problems.

2. **Engine Beds**

- These should be a minimum of 10mm thick, extended rearward and be welded to the hull and forward to the bulkhead. Webs or gussets must be welded in place midway to prevent flexing.

3. **Cooling System**

- Ensure pipe work to and from the skin tanks is of sufficient bore. Ensure tight bends and elbows are avoided or kept to a minimum (sizes are listed overleaf).
- For a Shire 70, 38mm (1 ½”) is the minimum hose size for the inlet and 35mm (1 ⅜”) for the outlet hose.

4. Skin Tanks

The ideal skin tank internal thickness is between 50 and 75mm, the table below will indicate a suitable tank size. However, volume will not compensate for lack of surface area. It should be recognised that fitting a large calorifier will increase the theoretical cooling capacity only until it is up to temperature. It is unlikely that a boat on the inland waterways will operate at full power for long periods of time. On standard engines the cooling water outlets are on the right hand (starboard) side of the engine. The outside of the skin tank must be completely below the waterline all of the time for effective cooling.

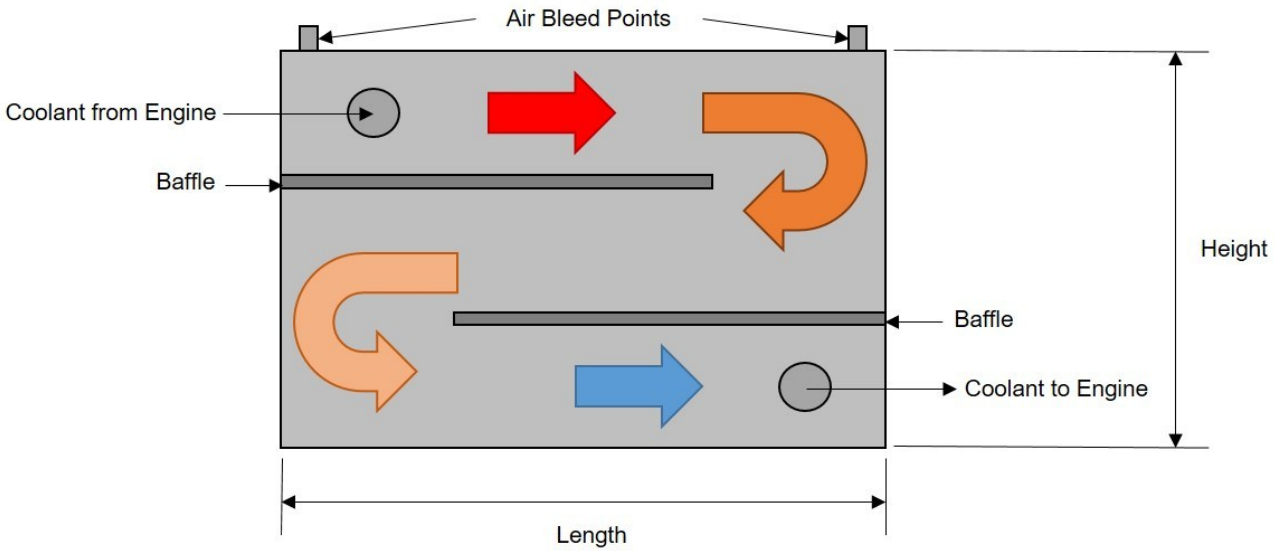

Figure 8: Skin Tank Flow Diagram

Recommended Skin Tank Size					
Engine	**HP**	**KW**	**Skin tank surface area m²**	**Suggested Height mm**	**Suggested Length mm**
70	70	51.7	1.55	840	1850

The skin tank size must be increased by up to approx 10% or a separate skin tank installed to cool the hydraulic oil, if a hydraulic bow thruster is used. Please refer to Section 5 – Installation, 21. Hydraulic Drive Transmissions for further information.

5. Engine Cooling Water Inlet and Outlet Hose Connections

The connections are on the right hand (starboard) side of the engine:

Engine	Size (mm)
Shire 70	38mm (1 ½”) ID Inlet
	35mm (1 ⅜”) ID Outlet

Use a good quality hose that cannot collapse or kink and is capable of working at temperature in excess of 100°c.

A.S.A.P. Supplies LTD can supply suitable 38mm ID and 35mm ID hoses if the correct size hoses cannot be sourced locally. The part numbers used by A.S.A.P. Supplies LTD are shown in the following table.

A.S.A.P Supplies Part Number	Size of Hose (mm)
206435	35mm
206438	38mm

A.S.A.P. Supplies LTD can be contacted by:

Telephone	+44 1502 716993
Internet	www.asap-supplies.com

Please be aware that other suppliers are available.

6. Pressurised Water Header Tank

WARNING:

SCALD HAZARD! NEVER REMOVE THE HEADER TANK CAP IF THE ENGINE IS HOT. STEAM AND HOT COOLANT MAY SPURT OUT AND CAUSE INJURY. TIGHTEN THE HEADER TANK CAP SECURELY AFTER BEING REMOVED. STEAM CAN SPURT OUT DURING ENGINE OPERATION IF THE CAP IS LOOSE.

- The pressurised header tank should be mounted higher than the level of the engine, no less than 300mm, and no more than 1m from the engine, to prevent cooling system

air locks.

- The header tank has two hose connections of different internal diameters. The smaller internal diameter hosetail (left side of tank) should be connected to the top of the thermostat housing on the engine. This is the air-bleed. The larger internal diameter hosetail (right side of tank should be connected to the lower pipe on the engine. This is the water-fill. The hoses **MUST** be connected correctly.
- The connections for the Header Tank are shown on (**Figure 9**).
- A constant rise on pipework is required to prevent air locks.

	Connections on Engine	Connections on Header Tank
Shire 70	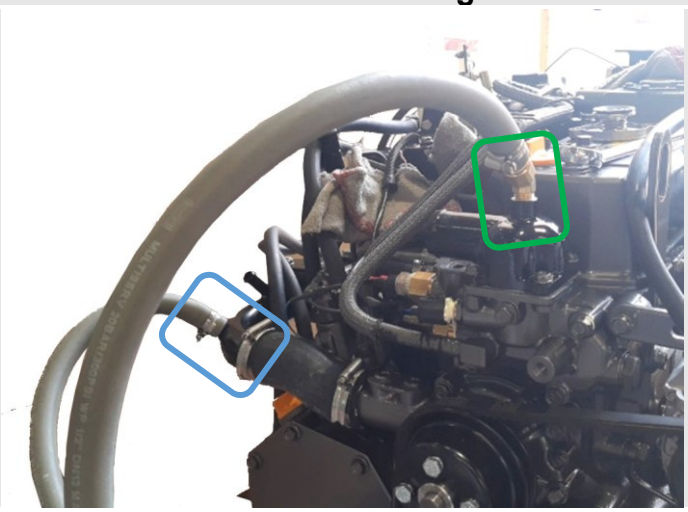	

Figure 9: Shire 70 Header Tank Connections

7. Shaft Connection and Propeller Selection

- Some type of flexible coupling must be used to connect the gearbox output flange to the propeller shaft flange.
- Please note, underperforming engines will not be covered under warranty if the cause of the poor performance is found to be the use of an inappropriate propeller.

8. Engine Anti-Vibration Mounts

- Ensure that the engine feet do not end up at the top of the thread on the engine mounts, this puts undue pressure on them and can result in excessive engine movement and premature mount failure. If this is a problem, put steel packing plates under the mounts. Packing plates 25mm thick are available: Order RDG3906 Engine mount spacer. Alternatively, they can be manufactured locally.
- Ensure that the engine has been installed for at least 24 hours before shaft alignment is checked, to allow the mounts time to settle under the engine weight.
- Ensure that the anti-vibration mount centre screw is sufficiently raised so as not to touch the engine bed. If this occurs, excessive engine vibration will be experienced through the hull.
- For best results, fit the front AV mounts into the front holes in the engine rails. If the engine room space is a problem the mounts can be fitted slightly further back in the alternative holes and the front of the rail cut off – leaving 50mm of material to retain strength (measuring from the centre of the mount hole to the front end of the rail). Note: This procedure is only possible on non 'E' Kit engines and may result in a very slight increase in vibration. AV mount installation points are shown on (**Figure *12***).
- Engine alignment should be checked every 700 hours or annually, whichever occurs first.

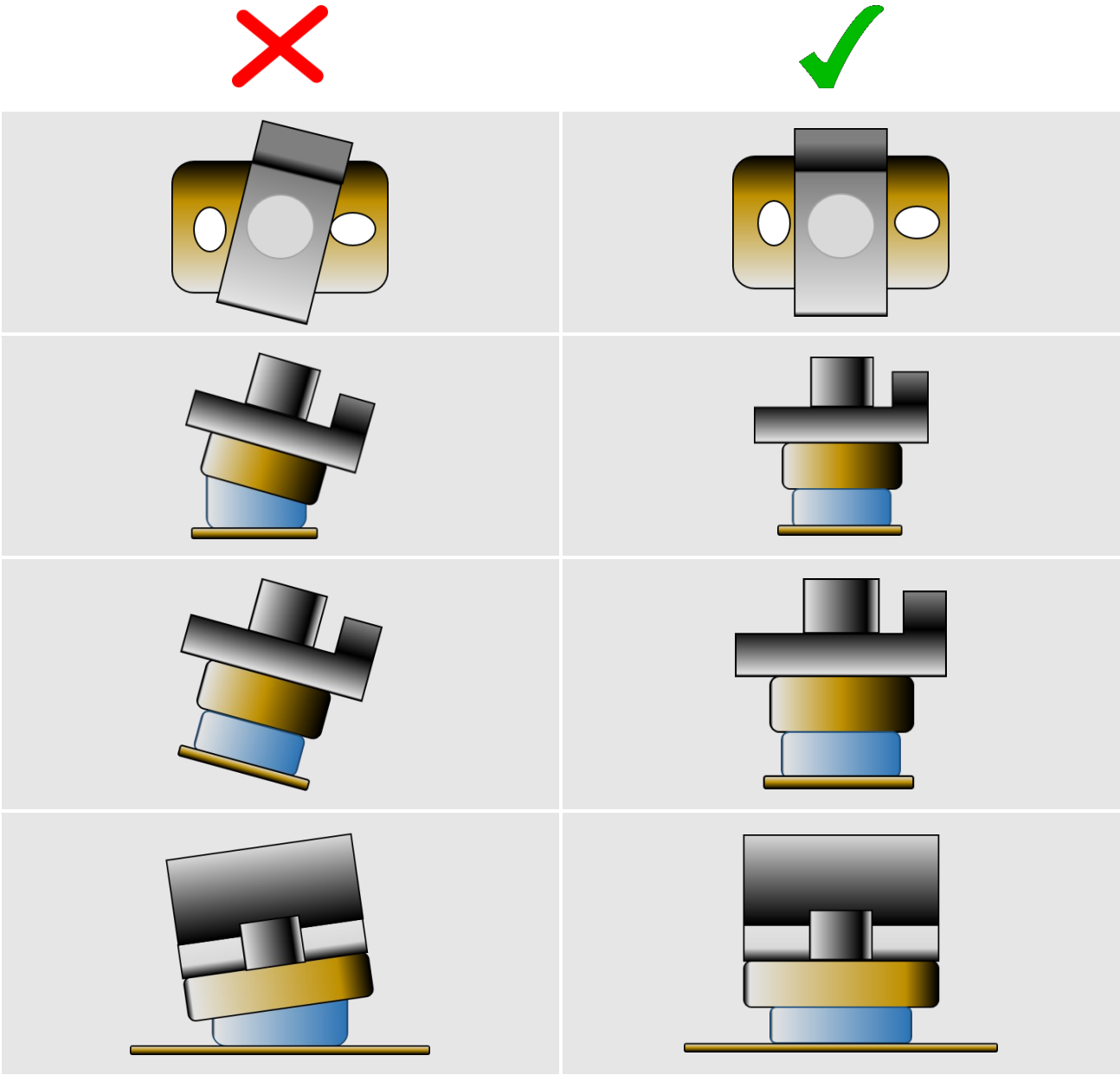

Figure 10: Correct Anti-Vibration Mount Installation

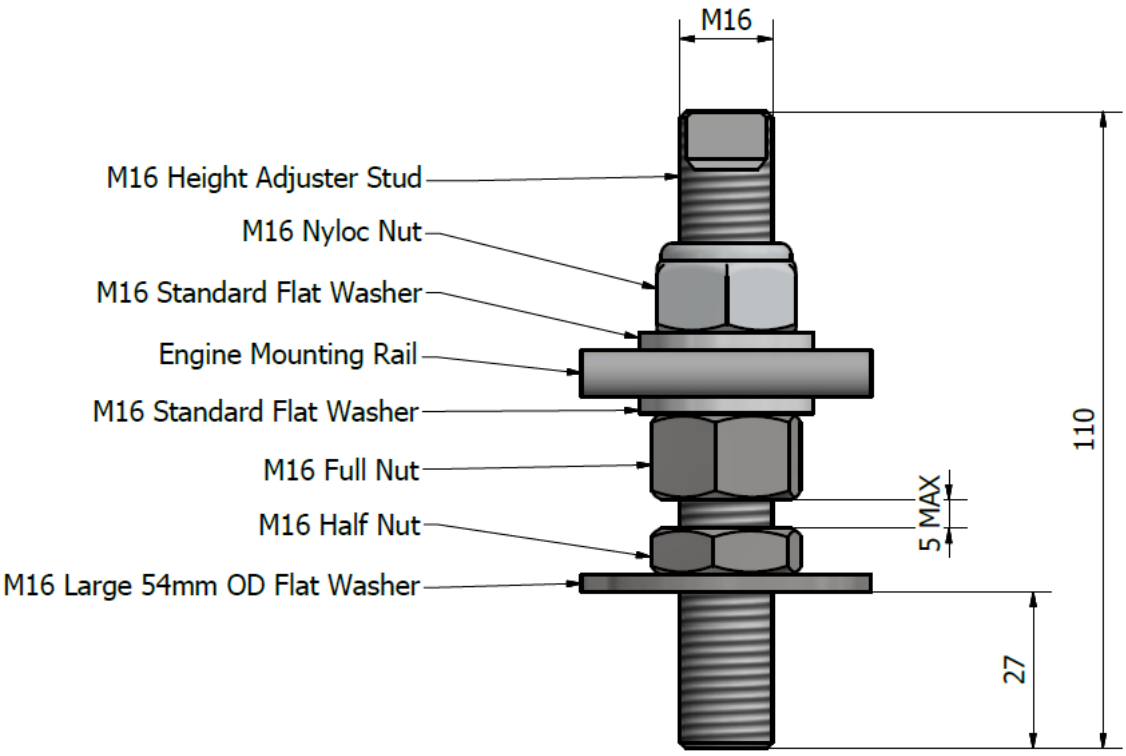

Figure 11: Correct Anti-Vibration Mount Installation

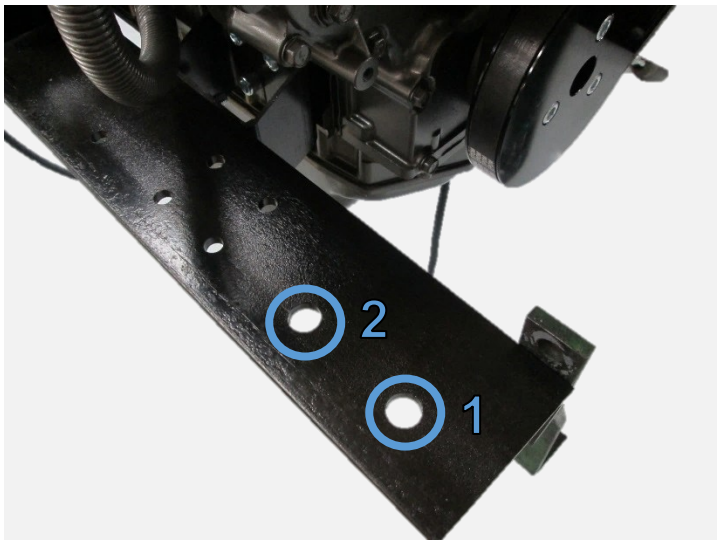

	Description
1	Normal mounting position
2	Alternative mounting position if engine compartment space is restricted

Figure 12: Anti-Vibration Mount Installation Points

9. Engine Alignment

- The gearbox output shaft flange and propeller shaft input flange must be almost perfectly aligned. A maximum of 0.05mm (0.002”) misalignment in any plane is acceptable. Ensure alignment is recheck after the first 4 hours of running, after the first month and thereafter annually.
- If the engine is out of alignment it will result in excessive vibration and possible damage to the stern tube and propeller shaft.
- Boats that are fitted with fully flexible drive couplings should still have the engine and shaft alignment as close as possible. A dummy shaft may be required for this purpose.

Some types of flexible shaft couplings require the input and output to be misaligned, check with the coupling manufacturer’s installation instructions.

- Minimum clearance of 25mm between rails and engine beds.

10. Engine Inclination

- The engine installation angle is the angle of the crankshaft centre to the water line (***Figure* 13**).
- The propulsion efficiency decreases as the engine installation angle increases.
- The **maximum** engine installation angle is 15°

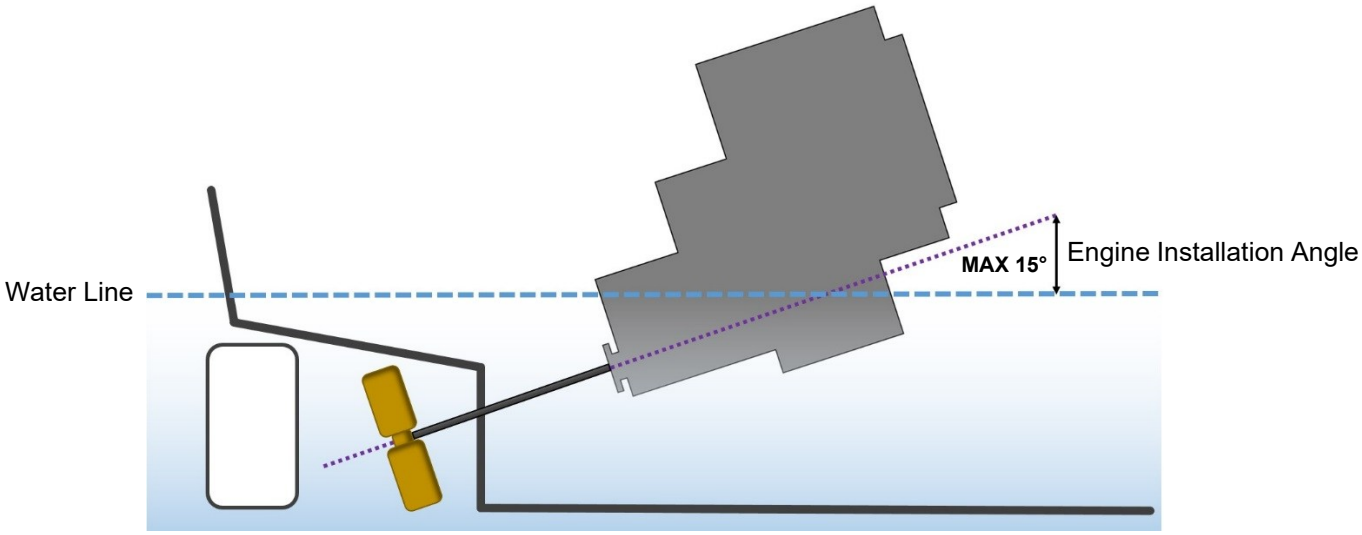

Figure 13: Maximum Engine Installation Angle

11. Electrics

CAUTION

- Do not attach any part, hose or cable to the engine wiring harness. There is a warning label attached to the harness to remind you of this.
- Connect the wiring extension harness multi plug to the panel plug and the other end to the engine.
- Connect the start battery positive cable to the engine starter motor solenoid terminal.
- The starter motor battery cable must have a cross sectional area of at least 50mm^2.
- Connect the domestic battery positive cable to the 240A alternator “Pos Out” terminal. This ensures that the 50A alternator charges the start battery and the 240A alternator charges the domestic battery. Twin alternators remove the requirement for a split charging system or relay.
- The cable will need to be manufactured locally and fitted between the lower 240A alternator “Pos Out” terminal and the domestic battery positive terminal. The cable should have a minimum cross-sectional area of at least 70mm^2.
- A 24v 120A alternator should have a minimum cable cross sectional area of 40mm^2.
- If an optional larger output alternator is fitted to either a new engine, or fitted to an old engine as an upgrade, ensure that all cables, master switches, terminals, split charge relays etc are of sufficient capacity for the increased current.
- Both the negative battery terminals can be connected to a common earth point.
- The 240A alternator is of the insulated earth design and requires a heavy-duty earth cable installed at all times.
- The electrical system complies with EN ISO 10133. The electrical supply for the engine ECU system requires a clean electrical supply as per **Section 6. Battery Disconnect Switch 6.1.b.** in EN ISO 10133. Connect the ECU power supply cable to the master switch output.
- The engine control system is fully electronic. Any adjustments, alterations or repairs need to be carried out be an authorised trained technician.
- It is important that the engine start battery is fully charged and is of the correct specification as stated in **1. Engine Data of Section 10 - Technical Data**.
- A red light (failure indicator light) is fitted to the relay panel on the engine. The failure indicator light will start flashing when a fault occurs with the engine. Please refer to **Section 11 - Fault Diagnosis** for further information.

12. Electrical Options

DANGER:

ELECTRIC SHOCK RISK!

- If the engine is fitted with the optional 230V 'E' Kit System, refer to the manual supplied with it for correct wiring, control box installation and operation.
- The Shire range can be supplied with other optional additional 12V, 24V or 48V alternators. This will be supplied fitted but not wired. It is the responsibility of the boat builder to ensure that this is correctly wired to the boats electrical system.

13. Engine Oil

WARNING:

BURN HAZARD! WAIT UNTIL THE ENGINE COOLS BEFORE YOU DRAIN THE ENGINE OIL. HOT ENGINE OIL MAY SPLASH AND BURN YOU.

NOTICE:

ENGINE OIL WITH A HIGHER API CLASS THAN CD IS UNSUITABLE FOR CANAL BOAT OPERATION AND WILL CAUSE ENGINE DAMAGE IF USED.

- All Shire engines are supplied fully run in.
- Check oil levels in engine and gearbox before starting
- The Shire 70 uses engine oil SAE 10W / 40 API class CD.

14. Fuel

WARNING:

DIESEL FUEL IS FLAMMABLE AND EXPLOSIVE UNDER CERTAIN CONDITIONS.

WARNING:

DIESEL FUEL IS HARMFUL TO SKIN. MAKE SURE THE RELEVANT PERSONAL PROTECTION EQUIPMENT IS WORN.

- Ensure the main fuel tank is clear of dirt and water.
- A separate water trap must be fitted to all engine installations. The engines are supplied with an additional fuel pre-filter water trap as standard.
- Connect fuel feed return hoses from engine to main supply and return lines to main fuel tank, ensuring they are connected the correct way around.
- Connect the inlet to the electric fuel pump inlet hose.
- The engine hoses are supplied with 10mm (3/8”) OD metal hosetails and should be securely fitted to the main supply and return pipes with compression fittings.
- The engine hoses should have sufficient slack to absorb engine movement without placing strain on the hoses and be securely clipped to prevent accidental damage and chafing.
- Initially fill the fuel system by loosening the bleed screw on the top of the primary fuel filter / water trap. Turn on the ignition to operate the electric fuel pump. Close the bleed screw when fuel begins to flow clearly (no bubbles). The rest of the process is done automatically by the engine. It is rarely necessary to bleed the injection pump or injectors upon installation as the engine will already have fuel in it from the engine run in and test procedure.

NOTICE:

THE PART CIRCLED IN Figure 14 IS NOT A BLEED SCREW. ATTEMPTS TO UNDO OR REMOVE IT WILL CAUSE DAMAGE TO THE PART.

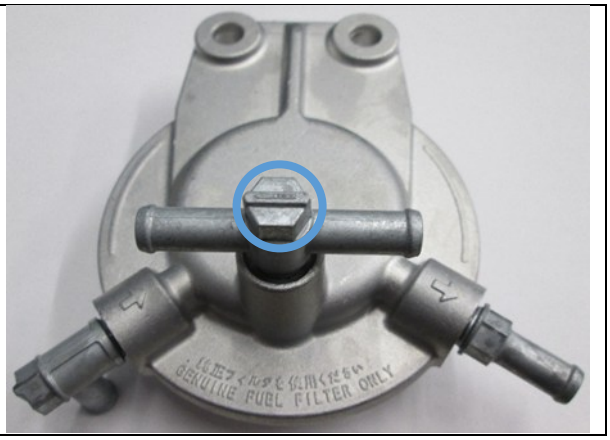

Figure 14: Secondary Fuel Filter Head (129004-55612-9)

15. Coolant

WARNING:

SCALD HAZARD! NEVER REMOVE THE COOLANT BOTTLE CAP IF THE ENGINE IS HOT. STEAM AND HOT COOLANT WILL SPURT OUT AND CAUSE INJURY. TIGHTEN THE CAP SECURELY AFTER BEING REMOVED. STEAM CAN SPURT OUT DURING ENGINE OPERATION IF THE CAP IS LOOSE.

WARNING:

BURN HAZARD! WAIT UNTIL THE ENGINE COOLS BEFORE YOU DRAIN THE ENGINE COOLANT. HOT ENGINE COOLANT MAY SPLASH AND BURN YOU.

- Yanmar recommend a coolant mix of 50% clean tap water and 50% antifreeze.
- Open the calorifier taps (if fitted) to fill the calorifier system and displace air.
- To fill the cooling system for the first time, fill the boat skin via the inlet hose connection or filler plug if fitted.
- Fill the engine through the white plastic expansion tank.
- Bleed skin tank.

After running the engine for the first time, stop the engine and monitor the water level frequently as trapped air bubbles may be expelled. Top up the system as necessary.

16. Calorifier

- The temperature of coolant flowing to the calorifier from the engine can be between 85 and 90°C. A blender valve must be incorporated in the calorifier / hot water system outlet to lower the hot water temperature for domestic use.

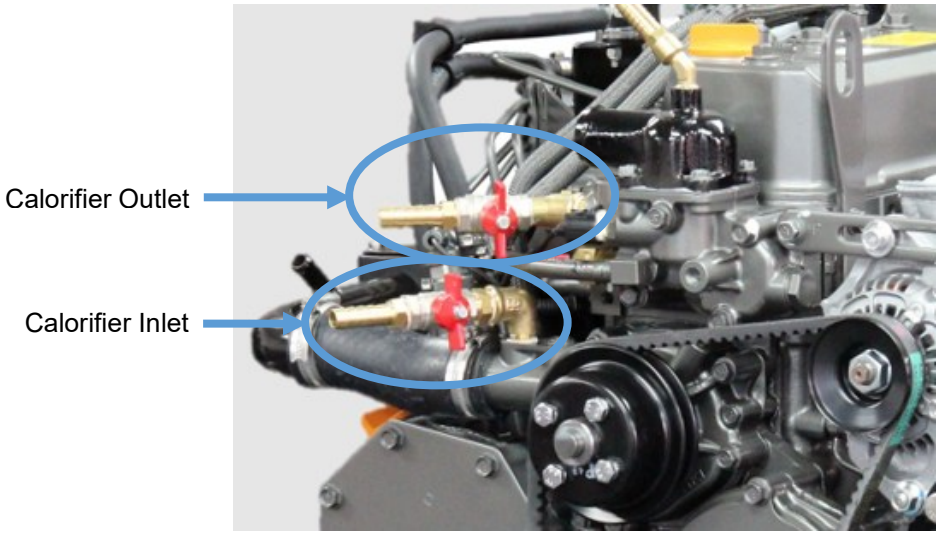

Figure 15: Shire 70 Calorifier Connections

17. Control Cables

- Connect engine speed control cable. With the engine off, ensure that the engine speed control lever achieves full travel from idle to full speed. Adjust if necessary.

- Check the gearbox shift lever selects positively, achieves full travel, and that the drive direction corresponds with the gearshift control lever. Ensure that the gearbox control lever and the gearshift lever are both in neutral before connection. Adjust if necessary.

18. Domestic Battery Bank

DANGER: **EXPLOSION HAZARD!** NEVER SHORT OUT THE BATTERY TERMINALS, INCLUDING WHEN CHECKING THE REMAINING BATTERY CHARGE THIS WILL RESULT IN A SPARK AND MAY CAUSE AN EXPLOSION OR FIRE.
WARNING: **BURN HAZARD!** BATTERIES CONTAIN SULPHURIC ACID. NEVER ALLOW BATTERY FLUID TO COME IN CONTACT WITH SKIN, EYES OR CLOTHING. SEVERE BURNS COULD RESULT. MAKE SURE THE CORRECT PERSONAL PROTECTION EQUIPMENT IS WORN.

If lithium-ion domestic batteries are fitted, fully follow the manufacturer's instructions. Domestic battery banks that are too large create excessive loads on the domestic alternator. Alternators running at maximum output for prolonged periods of time will eventually fail prematurely; alternators that fail due to the battery bank being over the maximum recommended size will not be covered by warranty.
Higher output additional alternators, or 'E' kits are available: if larger battery banks are required discuss your individual power requirements with the boat builder or engine supplier.

- The maximum domestic battery bank is calculated using the following:
  - Live aboard, three times domestic alternator, maximum output current.
  - Weekend cruising or hire fleet use, three and a half times domestic alternator, maximum output current.

  Example 1: Live aboard application fitted with a 150amp domestic alternator

  3 x 150 = 450 ampere/hour maximum battery bank size

  Example 2: Weekend cruising or hire fleet application fitted with a 240amp domestic alternator

  3.5 x 240 = 840 ampere/hour maximum battery bank size.

The standard alternators fitted to Shire engines are not suitable for charging lithium-ion batteries. If the standard alternators are used for charging lithium-ion batteries, they will not be covered under warranty. If lithium-ion batteries are to be used a specialist alternator will be required.

19. Control Panel

CAUTION

All Shire engines are supplied with an engine control panel that shows RPM and hours run and include warning lights and a warning buzzer. The Deluxe panels also have additional gauges for the water temp, oil pressure and battery charging voltage. The panels are designed to be splash proof and are correctly installed with the gauges vertical. Do not install so that they remain out in the open, or cover up when not on use.
The control panel engine tachometer is supplied already calibrated to measure correct engine speed. If a new control panel, tachometer or alternative alternator is fitted, the tacho will require re-calibrating.

Control Panel Calibration Procedure:

- Connect control panel plug to engine wiring loom plug.
- Turn ignition on (do not start engine).
- Press and hold black button on rear of tacho until “H-“appears on the digital display at the bottom of the tacho (on the front).
- When pressing and holding the black button on rear of tacho, the value displayed will increase / decrease until the button is released. Then when pressing again it will increase / decrease in the other direction. Keep doing this until the digitally displayed value on the bottom of tacho reaches the correct value, according to the type of alternator (see below table). This must be set to the alternator with blue and black wire connected to it.
- Confirm settings to tacho meter reader.
- An optical tachometer is required to check the reading.

Barrus Alternator (Amps)	Barrus Tacho reading
50	10.50 – 11.00
240	22.00

Alternative or non-standard alternators will require calibrating and checking by trial and error, with a hand held tacho until the engine speed and indicated tachometer speed are the same. For the majority of the engines, the tacho is driven by the 50A alternator.

- The Shire 70 has an energised to run system.

20. Exhaust System

WARNING:

EXHAUST HAZARD! NEVER OPERATE ENGINE WITHOUT PROPER VENTILATION. NEVER BLOCK VENTS OR OTHER MEANS OF VENTILATION. ALL COMBUSTION ENGINES CREATE CARBON MONOXIDE GAS DURING OPERATION. ACCUMULATION OF THIS GAS COULD CAUSE ILLNESS OR EVEN DEATH.

If replacing Exhaust Manifold Blankets, ensure appropriate PPE is worn. Exhaust Blanket part numbers are available in the Part Manuals for the engine.

The exhaust outlet size on the engine is 2” BSP female. There must be a flexible exhaust hose of suitable exhaust grade between the engine and the silencer or hull outlet. The outlet must be above the waterline at all times.

Make sure the exhaust increases then decreases in height as shown in (***Figure 16***).

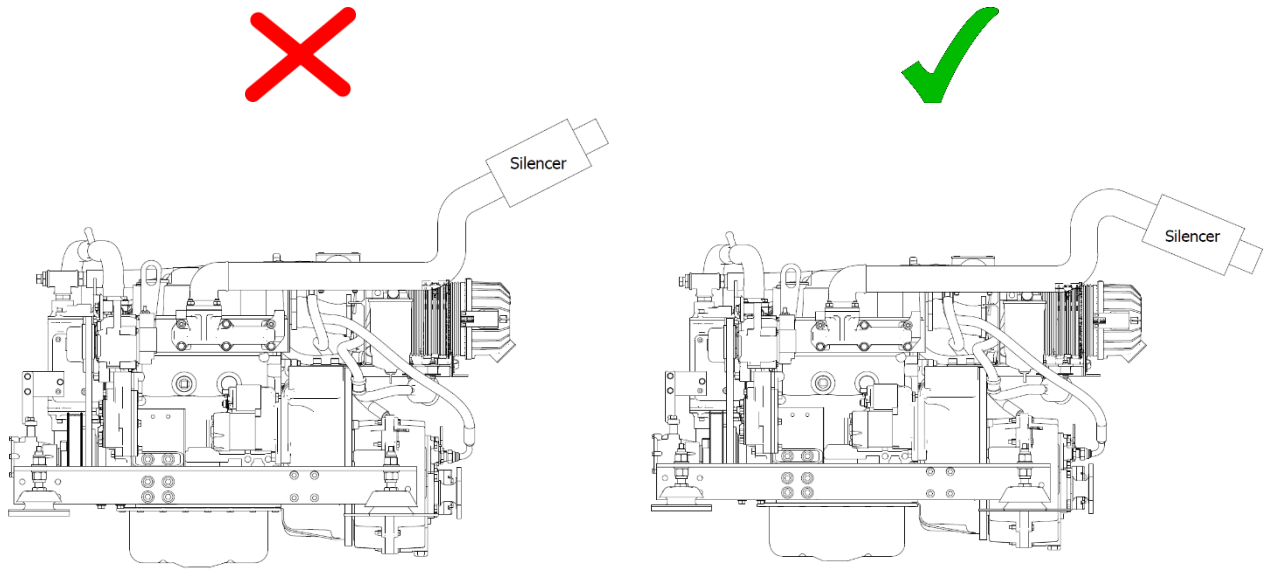

Figure 16: Correct Exhaust Installation

21. Hydraulic Drive Transmissions

If an engine is to have a hydraulic drive transmission attached to it instead of a conventional marine gearbox, a number of points must be observed.

- Bobtail engines (i.e. Engines supplied without a marine gearbox), normally do not have a gearbox oil cooler fitted. However if a cooler is supplied, this will only be suitable to cool a conventional marine gearbox.
- Hydraulic drive transmissions generate far more heat than a conventional marine gearbox. Therefore the size of the oil cooler installed must be calculated by the hydraulic drive transmission supplier. This is to ensure it has sufficient cooling capacity and is sized appropriately taking into account:

- Maximum engine power.
- High ambient summer air temperature.
- Summer River/Canal/Sea temperature.
- No additional restriction to engine coolant flow is present.

Skin tanks will also need to be increased by up to approx. 10% to dissipate the additional heat generated, when a hydraulic drive system or hydraulic bow thruster is used.
Or
An additional separate skin tank of suitable capacity with separate water circulating pump will need to be fitted for a hydraulic drive transmission.

Hydraulic oil coolers should be installed after the engine, not before. Coolers that are installed before the engine will invalidate the engine warranty.

22. Hydraulic Pump Drive Option (Shire 70)

For SAE pump (9T)

If a hydraulic pump is required to drive items such as bow thrusters or hydraulic winches, then the following parts are required to enable drive to be taken from the engine power take off:

Part No 129980-26220 incorporates:

- Cover: 121023-26070
- Cover packing: 121023-26061
- Bearings: 129900-26250 x 2pcs (included in the specialised gear case).
- For high discharge volume: Above 20cc/rev.

Note: The pump will need to be sourced separately

Ratio: 1:231

A gearbox P.T.O (Power Take Off) is available as an optional extra on all engines.

23. PRM 280DP Gearbox with Power Take Off (Option - RDG914A198)

The PRM B 280 with power take off is designed for driving hydraulic pumps made to SAEJ77 Series specification. The maximum power which can be transmitted is 22kW (29.5hp) per 1000rpm.

The power take off operates in the opposite direction to the gearbox input shaft. The output of the live power take off is the same speed as the engine.

24. Engine Start Battery

For the required specification of the Engine Start Battery, please refer to **Section 10 – Technical Data.**

25. Additional Wiring Connection

An additional grey wire tag is fitted which is found coming out of the loom near the relay. This is live only when ignition is energised and can be used to trigger a relay and circuit that may be required to operate only when the engine is running such as a bow thruster, calorifier / heating system circulation pump, engine cover microswitch operated magnet, etc. This wire is labelled on the wiring loom diagram as “Not Connected”.

Note, this wire should only be used to operate an electrical relay in conjunction with a separate fused supply.

SECTION 6 – Operation

NOTICE:

REFER TO THE YANMAR MANUAL PRIOR TO STARTING THE ENGINE.

1. Starting the engine for the first time

- Ensure the start battery is fully charged and is of the correct specification.
- Remove ignition key.
- Ensure all oil and coolant levels are checked.
- Ensure both the engine and domestic batteries are connected and fully charged. Both battery master switches must be turned on. Failure to do so may damage the domestic alternator.

2. Starting Procedure

- Ensure the start battery is fully charged and is of the correct specification.
- Ensure there is no one in the engine compartment.
- Ensure the engine compartment door is closed.
- Ensure the gearshift control level is set to neutral and that all persons are clear of any moving parts.
- Insert ignition key.
- Turn key to on position. The glow plug light will illuminate.
- Observe warning lights (and gauges on deluxe panel). Note: The engine water temperature overheat warning light will only come on for a brief period of time when the ignition is first turned on as a bulb check. It will then only illuminate in the case of the engine coolant temperature exceeding the maximum safety level.
- Wait for the glow plug warning light to go out.
- Turn key to start and hold to crank.
- Crank the engine for no more than 15 seconds.
- Upon engine start, immediately release the key.
- Key will return to on position.
- The warning buzzer will stop and on the deluxe panel, the oil pressure gauge will show an oil pressure of 3.5 - 4.5 bar (51 – 61 psi).
- Should any warning light not go out, or if there is no reading on the oil pressure gauge, the buzzer will continue sounding. In this case, stop the engine immediately and check the relevant system (Note: If the charge light does not go out, briefly increase the engine speed).

- The engine has a warm up feature which means it revs at approx. 1300 rpm when it is cold. The speed will gradually automatically drop to 1000 rpm as the engine warms up. Do **NOT** attempt to shift the engine into gear when the idle speed is **ABOVE** 1000 rpm.
- Stop engine if any abnormal noises are detected.
- Visually check the engine for oil, fuel and coolant leaks, after initial start-up and at regular intervals. Note: Engine must be stopped, with ignition key removed, to carry out this check.

3. Stopping Procedure

- Move speed control lever to idle position.
- Turn key to the off position.

4. Full Load Running

- Running diesel engines near there rated output (maximum load) regularly will disperse accumulated carbon and condensation, enhancing engine life and reducing emissions.
- Running the engine at, or near maximum speed whilst in gear may not be possible on inland waterways with speed limits in place. If this is possible, ensure that the water is deep enough not to damage the propeller. It is recommended that the engine is run at or near full load for 15 minutes (maximum revs, in gear) every 50 hours.

5. Refuelling

WARNING:

DIESEL FUEL IS FLAMMABLE AND EXPLOSIVE UNDER CERTAIN CONDITIONS.

WARNING:

DIESEL FUEL IS HARMFUL TO SKIN. MAKE SURE THE RELEVANT PERSONAL PROTECTION EQUIPMENT IS WORN.

- All Shire canal boat engines run on diesel fuel.
- Please note that when the vessel is to be left for any period of time, the fuel tank should be left full to eliminate the build-up of condensation and formation of water in the fuel tank.

- Engine to be turned off while refuelling.
- The use of renewable and alternative fuels that comply with the EN15940 standard is permitted.
- This refers to GTL (Gas to Liquid), BTL (Biomass to Liquid) and HVO (Hydrotreated Vegetable Oil) fuels.
- If an alternative fuel that does not comply with EN15940 is used, problems such as seizure of the fuel injection pump may occur due to deterioration of fuel lubricity. This will NOT be covered by warranty.
- Alternative fuels that comply with EN15940 have lower density and lower calorific values per unit capacity than those of ordinary diesel fuels, thus it is expected that the engine output will decrease.

6. Diesel Fuel Additive

The use of diesel fuel additive is recommended on Shire engines. The quality of the fuel available when cruising is often unknown. Also, the fuel may have been in storage for long periods of time. The use of additives will ensure that your engine fuel injection system is in top condition which should result in many years of smooth reliable operation, without the cost and inconvenience of expensive breakdowns due to poor quality fuel. It has also been found that improvements in fuel consumption and start ability are an added benefit of using this product. Diesel fuel additive is available from your Shire dealer in a handy 500ml container, Part Number RDG80210219.

7. Exhaust Back Pressure

The back pressure falls within the manufacturers recommended range when using the optional exhaust system with the engine. Exhaust silencers, flexible exhaust hose connections and lagging blanket are all available as optional extras:

Shire 70

Part Description	Part Number
Exhaust Coupling 2” x 2” BSP	RDG9048003
Exhaust Silencer 2” BSP	RDG9048005
Flexible Exhaust Hose 2” BSP (24”)	RDG9048004
Hospital Silencer 2” BSP	RDG9048364
18” Flexible Exhaust Hose Blanket	RDG2477
2” Equal Elbow BSP	RDG9048002

8. Hybrid System (For engine with Hybrid System fitted)

Refer to the separate Hybrid Operation Manual for more details on the system.

9. Single Lever Side Mount Operation - Optional (RDG9210055)

To engage forward or reverse gear:

- Lift the safety latch under the handle before shifting.

To rev the engine in neutral:

- Pull the lever out sideways from the main body.
- Lift the safety latch under the handle then shift.

10. Shifting in and out of gear

- The engine should only be shifted in and out of gear when the engine is warm, and the idle speed is 1000 rpm. If the engine is shifted in and out of gear at a higher speed, when the engine is cold, then gearbox damage will occur.

SECTION 7 – Service Procedure

NOTICE:

REFER TO THE YANMAR MANUAL PRIOR TO CARRYING OUT ANY SERVICE OR MAINTENANCE WORK.

WARNING:

PRIOR TO CARRYING OUT ANY SERVICE OR MAINTENANCE WORK MAKE SURE THE RELEVANT PERSONAL PROTECTION EQUIPMENT IS WORN.

1. Engine Oil and Filter Change

WARNING:

BURN HAZARD! WAIT UNTIL THE ENGINE COOLS SLIGHTLY BEFORE YOU DRAIN THE ENGINE OIL. HOT ENGINE OIL MAY SPLASH AND BURN YOU.

- Change the engine oil while the engine is still warm.
- Remove the blanking plug in the sump pump spout (8mm Allen key). The larger of the two oil extraction pumps is for draining engine oil.
- Place a plastic tube over the spout and into a container. Operate the pump handle to empty the sump. Note: Remember to refit the blanking plug afterwards.
- Place a drip tray under the engine to catch the small amount of oil that will escape from the oil filter. Using an oil filter removal tool, slacken the filter from the engine block in an anti-clockwise direction. Remove the tool and spin off the filter.
- Lightly oil the new filter O ring seal and install the filter onto the engine. Spin it on in a clockwise direction and finally tighten by hand only as firmly as you can.
- Refill the sump using the yellow oil filler cap in the rocker cover on top of the engine.
- Oil level should be to the top mark on the dipstick.
- Run the engine for 5 minutes before checking the oil level with the dipstick and top up if required.
- Do not exceed the maximum oil level marker as this may cause damage to the internal components of the engine.

2. Air Filter Check and Change

- Release the two spring clips. Pull off the end cover to reveal the filter element. The element simply pulls out.
- To fit the new element, slide the open end of the filter element into the main body. Gently push the element until fully seated. Refit the end cover.
- The air filter is constructed from pleated paper. Inspect it closely for dust or dirt. The air filter cannot be cleaned and must be replaced when dirty. The engine requires clean unrestricted air to run efficiently. Failure to maintain the air filter could result in smoke, increased fuel consumption and ultimately engine damage.

3. Gearbox Oil Change

WARNING:

BURN HAZARD! WAIT UNTIL THE GEARBOX COOLS SLIGHTLY YOU DRAIN THE GEARBOX OIL. HOT OIL MAY SPLASH AND BURN YOU.

Some engines will have a gearbox sump pump fitted. To change the oil in this circumstance, follow the same procedures as were outlined for changing the engine oil. For engines without a gearbox sump pump follow the procedure below.

- Change the gearbox oil while it is still warm (Please refer to the gearbox manual for more information).
- Place a tray beneath the gearbox that will hold at least 2 litres.
- Remove the drain plug and allow 5 minutes for the oil to drain thoroughly.
- Replace the drain plug. Ensure that the sealing washer (if used) is still in place and in good condition before tightening. Fit a new washer if required.
- Refill the gearbox with oil to the upper mark on the dipstick. Screw the dipstick in fully, to establish level. Refer to the PRM owner manual for more details. **Section 6** in this manual contains details of oil specifications.
- Do not overfill the gearbox as this can damage the internal components.

Gearbox Model	Location of Dipstick / Filler Plug / Drain Plug
PRM 280	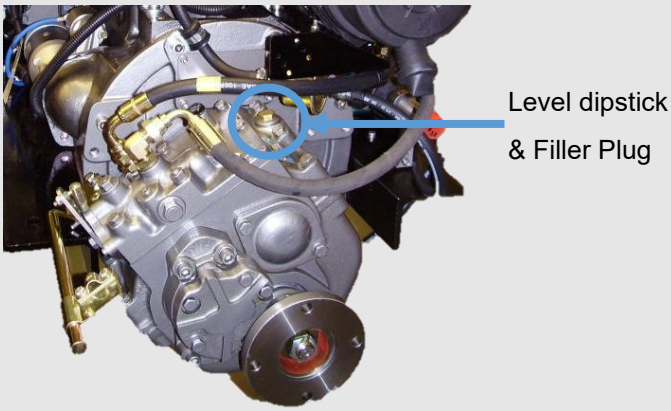
PRM 500	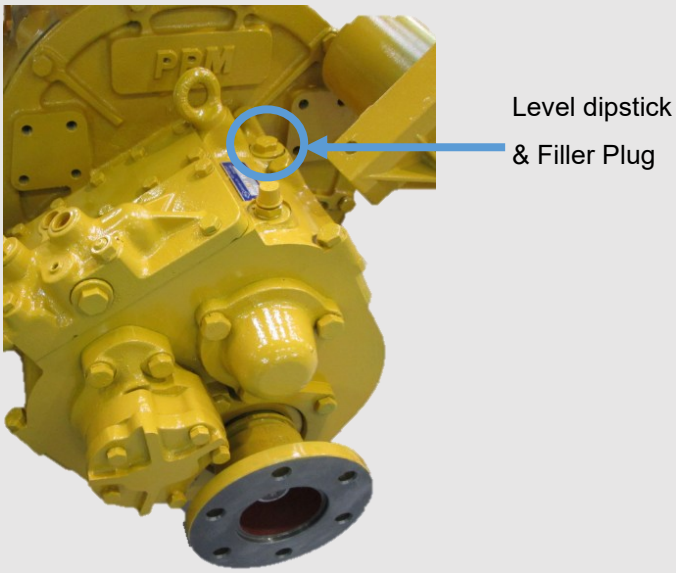

Figure 17: Location of Dipstick / Filler Plug on Gearbox

4. Disposal of Oil and Related Items

NOTICE:

ALWAYS BE ENVIRONMENTALLY RESPONSIBLE.

- Please dispose of used oil and oil filters safely with due regard for the environment and take to your local waste oil disposal point.
- Do not allow oil or contaminated parts to enter the inland water way system.

5. Primary Fuel Filter Drain (RDG9188346)

WARNING:
DIESEL FUEL IS FLAMMABLE AND EXPLOSIVE UNDER CERTAIN CONDITIONS.

WARNING:
DIESEL FUEL IS HARMFUL TO SKIN. MAKE SURE THE RELEVANT PERSONAL PROTECTION EQUIPMENT IS WORN.

- Place a small drain bowl under the primary fuel filter / water trap.
- Loosen the drain screw located in the bottom of the fuel filter / water trap (**Figure 18**)
- Drain off any water.
- Once the water has been drained, retighten the drain screw.
- It is unlikely the complete fuel system will require bleeding.
- Run engine for 5 minutes.
- Check that the drain union is tight and that there are no leaks.
- Do not over tighten the drain screw.

The boat builder should have fitted an additional water trap in the fuel system. Ensure that this is drained regularly.

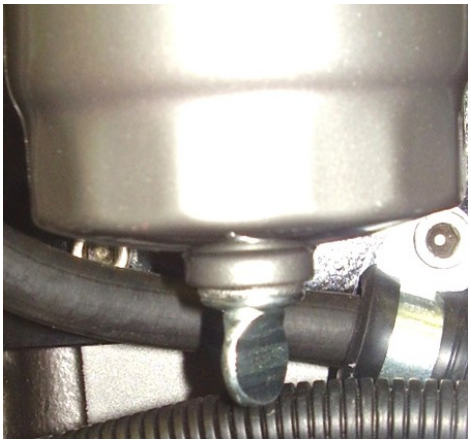

Figure 18: Primary Fuel Filter Drain Screw

6. Primary Fuel Filter Change

DANGER:

DIESEL FUEL IS FLAMMABLE AND EXPLOSIVE UNDER CERTAIN CONDITIONS.

WARNING:

DIESEL FUEL IS HARMFUL TO SKIN. MAKE SURE THE RELEVANT PERSONAL PROTECTION EQUIPMENT IS WORN.

- Ensure the fuel tank is at least ¾ full prior to undertaking this procedure.
- Turn off the main boat fuel supply tap. This is located on or near the fuel tank.
- Place a small drip tray under the filter body.
- Remove the fuel filter using a filter strap wrench. Unscrew the filter until loose then remove by hand.
- Retain the metal fuel filter drain screw from the old filter and reuse in the new filter. The part number for the drain screw is RDG9189022.
- Smear a small amount of clean fuel on all of the O ring seals that are supplied with the new filter element.
- Screw the new element back into the filter head. Tighten by hand only.
- Turn the main boat fuel supply tap back on.
- Ensure the system is correctly bled before attempting to start up.

7. Secondary Fuel Filter Change

DANGER:

DIESEL FUEL IS FLAMMABLE AND EXPLOSIVE UNDER CERTAIN CONDITIONS.

WARNING:

DIESEL FUEL IS HARMFUL TO SKIN. MAKE SURE THE RELEVANT PERSONAL PROTECTION EQUIPMENT IS WORN.

- Refer to the Yanmar Operators Manual, *Periodic Maintenance*.

8. Fuel System Bleeding

DANGER:

DIESEL FUEL IS FLAMMABLE AND EXPLOSIVE UNDER CERTAIN CONDITIONS.

WARNING:

DIESEL FUEL IS HARMFUL TO SKIN. MAKE SURE THE RELEVANT PERSONAL PROTECTION EQUIPMENT IS WORN.

- Ensure the fuel tank is at least ¾ full prior to undertaking this procedure.
- Refer to the Yanmar Operators Manual, *Before You Operate*.

9. Cooling System

DANGER:

SCALD HAZARD! NEVER REMOVE THE COOLANT PRESSURE CAP IF THE ENGINE IS HOT. STEAM AND HOT COOLANT WILL SPURT OUT AND SERIOUSLY BURN YOU. TIGHTEN THE CAP SECURELY AFTER BEING REMOVED. STEAM CAN SPURT OUT DURING ENGINE OPERATION IF THE CAP IS LOOSE.

WARNING:

BURN HAZARD! WAIT UNTIL THE ENGINE COOLS BEFORE YOU DRAIN THE ENGINE COOLANT. HOT ENGINE COOLANT MAY SPLASH AND BURN YOU.

- To check the coolant level, ensure that the engine has been shut down for at least half an hour.
- The coolant level can be checked visually and should be between the two level marks formed on the front of the white plastic expansion tank.
- If required, top up the level with coolant (50% clean tap water and 50% ethylene glycol

based anti-freeze) through the expansion tank filler cap.

- Do not use water only to top up as this weakens the coolant mix, reducing the level of frost protection and anti-corrosion protection of the coolant.
- Do not mix anti-freeze types of different colour, they can form a gel and block the cooling system.

10. Belt Adjustment

WARNING:

SEVERE HAZARD! KEEP HANDS AND OTHER BODY PARTS AWAY FROM MOVING/ROTATING PARTS. WEAR TIGHT FITTING CLOTHING AND KEEP YOUR HAIR SHORT OR TIE BACK. REMOVE ALL JEWELLERY BEFORE COMMENCING WORK. CHECK BEFORE STARTING THE ENGINE THAT ANY TOOLS OR RAGS USED DURING MAINTENANCE HAVE BEEN REMOVED FROM THE AREA.

- Ensure the ignition key is removed before carrying out any adjustments.
- Turn the battery master switch to the off position before carrying out any adjustments
- Depress the longest run of the drive belt to be checked. If the travel exceeds 15-20mm using hard finger pressure, the belt needs re-tensioning.
- Loosen the upper adjuster on the alternator. Loosen the lower mounting pivot nut and bolt. Pull out either using hand pressure or using the tensioning screw, depending on which alternator belt is to be tensioned.
- Pull the alternator away from the engine to tighten the belt.
- Hold the alternator in position and retighten all the bolts

If the belts are over tightened, alternator bearing failure will occur.

11. Belt Maintenance

WARNING:

SEVERE HAZARD! KEEP HANDS AND OTHER BODY PARTS AWAY FROM MOVING/ROTATING PARTS. WEAR TIGHT FITTING CLOTHING AND KEEP YOUR HAIR SHORT OR TIE BACK. REMOVE ALL JEWELLERY BEFORE COMMENCING WORK. CHECK BEFORE STARTING THE ENGINE THAT ANY TOOLS OR RAGS USED DURING MAINTENANCE HAVE BEEN REMOVED FROM THE AREA.

- Ensure the ignition key is removed before carrying out any maintenance.
- Turn the battery master switch to the off position before carrying out any maintenance.
- Do not allow oil to contact the belt. Oil attacks the construction of the belt. This reduces the drive efficiency and will cause it to fail prematurely.
- Replace the belt if it cracks or splits and as the adjustment nears the limit of travel.

Some boat builders may remove one or more of the alternators during the installation of the engine. It is essential that when the alternators are refitted that the alignment is perfect or premature belt wear will occur.

12. Belt Replacement

WARNING:

SEVERE HAZARD! KEEP HANDS AND OTHER BODY PARTS AWAY FROM MOVING/ROTATING PARTS. WEAR TIGHT FITTING CLOTHING AND KEEP YOUR HAIR SHORT OR TIE BACK. REMOVE ALL JEWELLERY BEFORE COMMENCING WORK. CHECK BEFORE STARTING THE ENGINE THAT ANY TOOLS OR RAGS USED DURING MAINTENANCE HAVE BEEN REMOVED FROM THE AREA.

- Ensure the ignition key is removed before replacing any belts.
- Turn the battery master switch to the off position before replacing any belts.
- Ensure that you have the correct replacement belts before starting this procedure. Some engines may have been fitted with non-standard optional alternators which may not use the belt sizes listed. Make a note of these belt sizes upon delivery.
- Loosen the top adjuster bolts and the lower mounting pivot nut and bolt.
- Push the alternator towards the engine to loosen the belt.
- Remove the belt.
- Hold the belt in position over the top alternator pulley. Rotate the engine if required by hand, to guide the new belt into the “vee”.
- Re-tension the belt as above.

13. Control Panel Maintenance

WARNING:

REMOVE THE IGNITION KEY BEFORE WORKING IN ENGINE COMPARTMENT.
TURN BATTERY ISOLATION SWITCHES OFF.

- **To replace an illumination bulb:** Release the panel from its mounting. The bulbs are accessible from the rear of the panel. Remove the wires, unscrew the nut and pull out the bulb housing from the panel. Remove the bulb and replace. Refit bulb housing, screw the nut back up and refit the wires.
- **To replace any gauge:** Release the panel from its mounting. The gauges are accessible from the rear of the panel. Unplug the wire connectors, unscrew and pull the gauge out of the panel. Replace the gauge and refit. Reattach the wiring connectors.

Do not attempt to modify or connect external wiring to any of the control panel wiring or electrical components as this can potentially cause damage. Also see 25. Additional Wiring Connection of Section 5 – Installation.

Periodically squirt a lubricant into the key switch slot when the key has been removed (see Section 8 – Service Schedule). A lubricant such as WD40 – with silicon, would be suitable. Other lubricants are available. Then with the battery master switch turned off, operate the key switch a couple of times. This will ensure the lubricant works into the mechanism.

SECTION 8 – Service Schedule

NOTICE:

REFER TO THE YANMAR MANUAL PRIOR TO CARRYING OUT ANY SERVICE OR MAINTENANCE WORK.

WARNING:

PRIOR TO CARRYING OUT ANY SERVICE OR MAINTENANCE WORK MAKE SURE THE RELEVANT PERSONAL PROTECTION EQUIPMENT IS WORN.

1. Specifications and Capacities

Specification of Coolants and Lubricants to use:

Component	Lubricant
Engine	SAE 10W 40 API Class CD Oil
Coolant	50% Clean Water + 50% Ethylene Glycol Antifreeze
Gearbox	SAE 10W 40 API Class CD Oil

Engine Oil Capacity (with Filter):

Engine	Capacity (Litres)	Capacity (Pints)
Shire 70	10.5	18.5

Gearbox Oil Capacity (Including Cooler):

Gearbox	Capacity (Litres)	Capacity (Pints)
PRM 280	2.2	3.9
PRM 500	3	5.3

2. Service Intervals

	Check	Change	Notes
Engine Oil & Filter	Daily (Level)	Every 350 Hours OR 12 Months*	First change after 50 hours
Gearbox Oil	Weekly (Level)	Every 350 Hours OR 12 Months*	First change after 25 hours
Coolant Level	Daily (Level)	Every 24 Months	-
Boat Water Trap	Weekly	Every 350 Hours	This item is installed by the boat builder**
Primary Fuel Filter * **	50 Hours	At first 50 hour service and then every 350 hours OR 12 Months*	Drain water every 50 hours OR Monthly****
Engine Fuel Filter * **	-	Every 700 Hours OR 12 Months*	If large quantities of dirt or water are found in the Primary Fuel Filter then change at 350 hours
Final 1 Micron Fuel Filter	-	Every 350 Hours	Optional fit
Air Filter Element	175 Hours	Every 700 hours OR 24 Months*	Sooner if required.
Drive Belts	Daily	As required	Adjust as necessary
All Hoses	50 Hours	As required	Check hoses for damage or leaks. Replace as necessary.
Key Switch	Lubricate	Every 150 hours OR 12 Months*	As per instructions in Section 7 - Service Procedure

* Whichever occurs first.

** Follow separate water trap manufacturer's instructions (if available) on draining, cleaning, frequency of checking and replacement.

*** Only original filters which meet the Recreational Craft Directive/ Recreational Craft Regulation should be fitted to your engine.

**** If large quantities of water are found in the fuel when the filter is drained, increase the frequency of draining plus change fuel filters more regularly.

SECTION 9 – Wiring Diagrams

1. Engine Wiring Diagram Shire 70

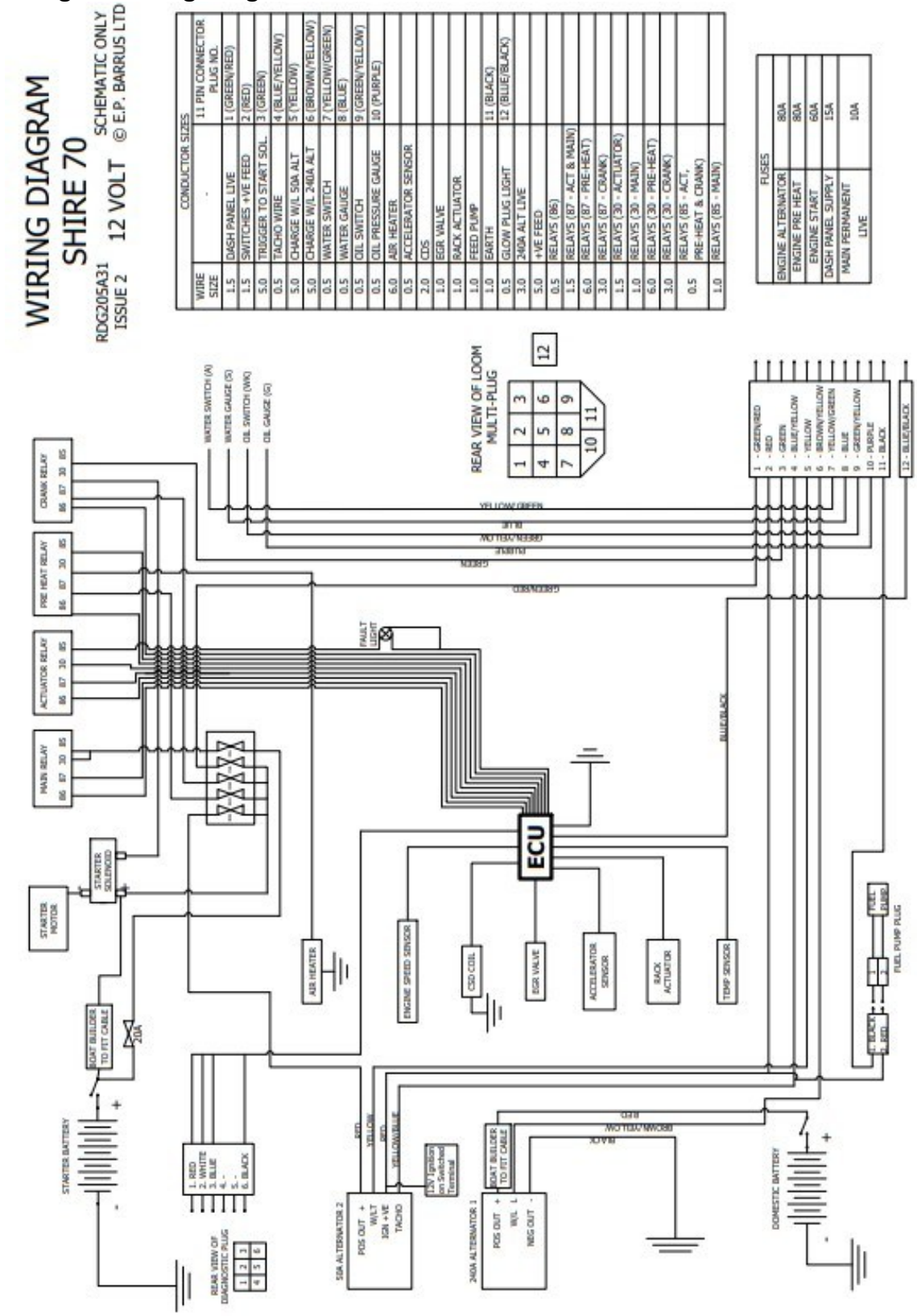

Figure 19: Shire 70 Wiring Diagram

2. Standard Control Panel Wiring Diagram

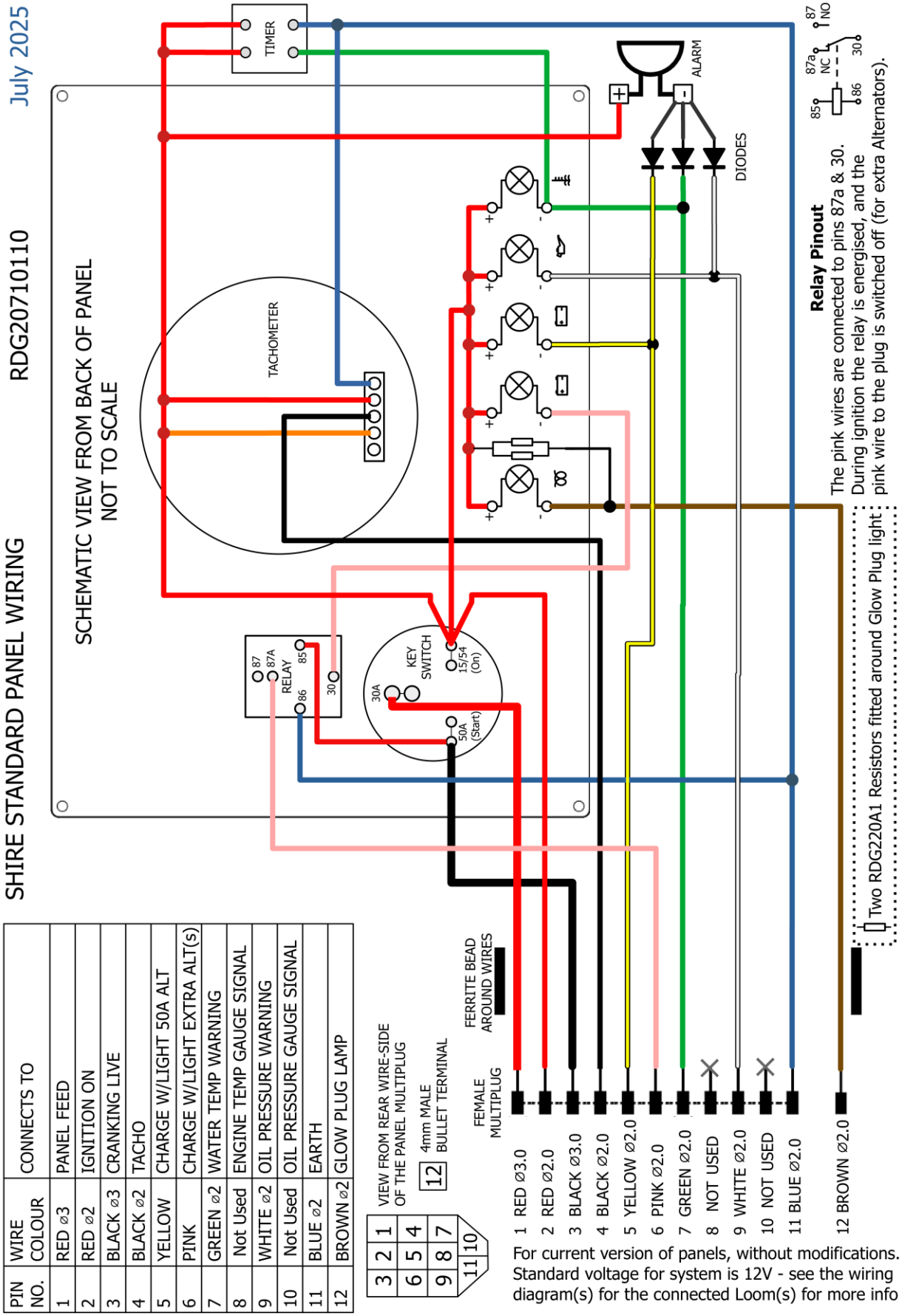

PIN NO.	WIRE COLOUR	CONNECTS TO
1	RED ø3	PANEL FEED
2	RED ø2	IGNITION ON
3	BLACK ø3	CRANKING LIVE
4	BLACK ø2	TACHO
5	YELLOW	CHARGE W/LIGHT 50A ALT
6	PINK	CHARGE W/LIGHT EXTRA ALT(s)
7	GREEN ø2	WATER TEMP WARNING
8	Not Used	ENGINE TEMP GAUGE SIGNAL
9	WHITE ø2	OIL PRESSURE WARNING
10	Not Used	OIL PRESSURE GAUGE SIGNAL
11	BLUE ø2	EARTH
12	BROWN ø2	GLOW PLUG LAMP

Figure 20: Standard Control Panel Wiring Diagram

3. Deluxe Control Panel Wiring Diagram

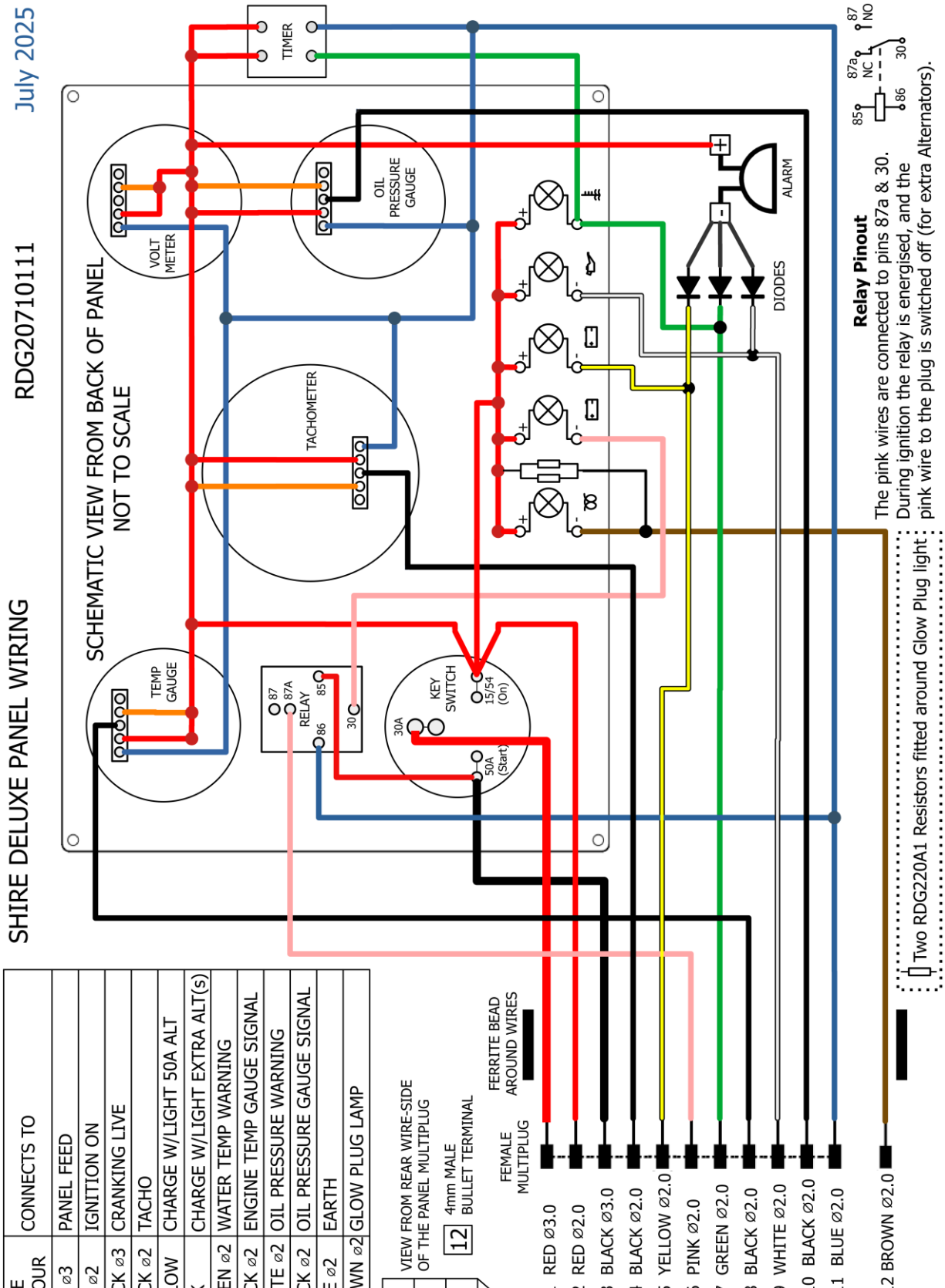

PIN NO.	WIRE COLOUR	CONNECTS TO
1	RED ø3	PANEL FEED
2	RED ø2	IGNITION ON
3	BLACK ø3	CRANKING LIVE
4	BLACK ø2	TACHO
5	YELLOW	CHARGE W/LIGHT 50A ALT
6	PINK	CHARGE W/LIGHT EXTRA ALT(s)
7	GREEN ø2	WATER TEMP WARNING
8	BLACK ø2	ENGINE TEMP GAUGE SIGNAL
9	WHITE ø2	OIL PRESSURE WARNING
10	BLACK ø2	OIL PRESSURE GAUGE SIGNAL
11	BLUE ø2	EARTH
12	BROWN ø2	GLOW PLUG LAMP

Figure 21: Deluxe Control Panel Wiring Diagram

4. Prestolite 24 Volt 120 Amp Alternator Wiring Diagram

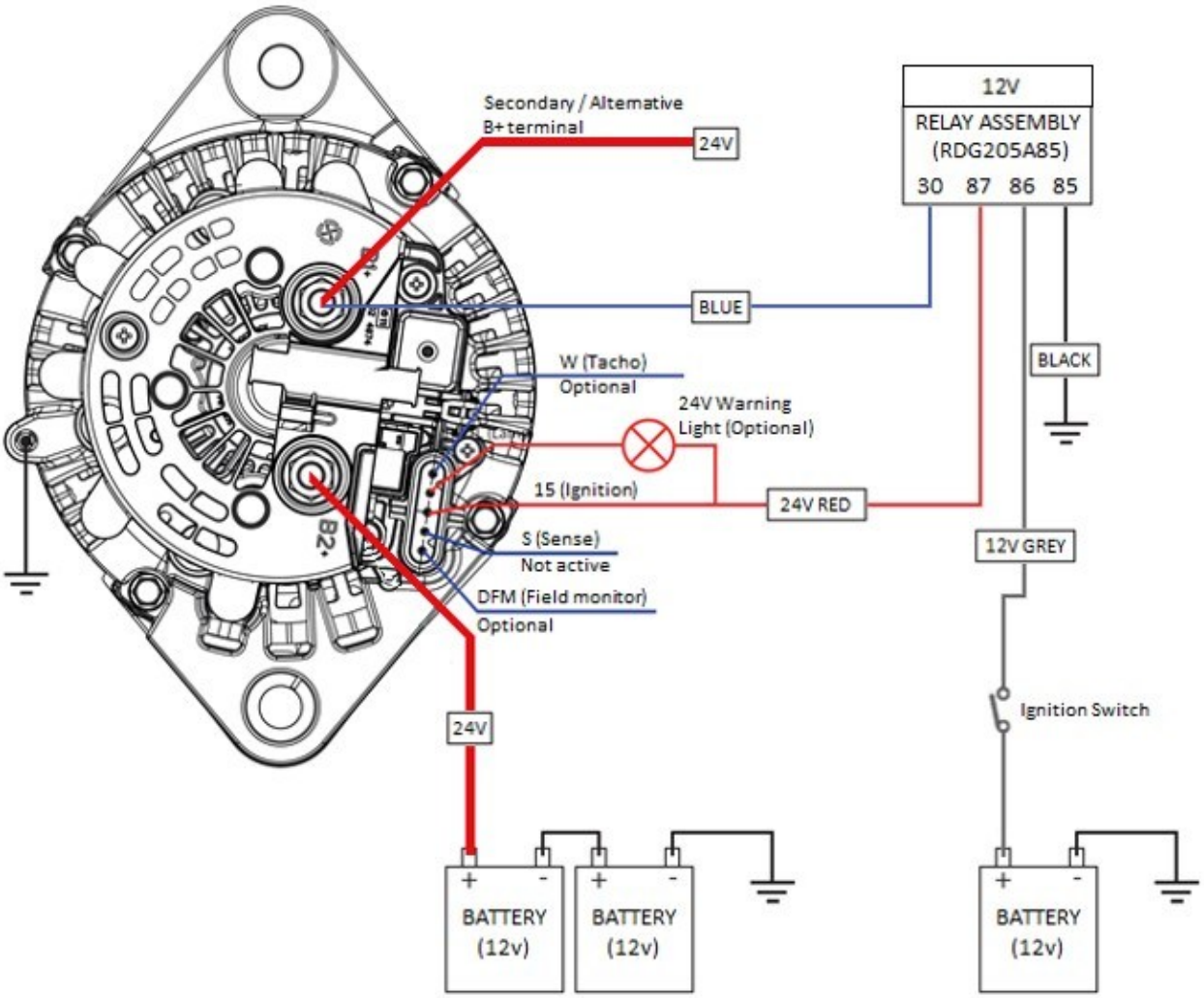

Figure 22: 24v 120A Alternator Wiring

Before wiring the 24 Volt 120 Amp Alternator, please read the information below:

- The S (Sense) terminal is not active on the AVI147J3110HD or AVI147J3113HD models so does not need connecting (on those two models).
- The W (Tacho) is an option (when a rev counter is fitted) and is not required for alternator functionality.
- The DFM (Field Monitor) usage is dependent on the engine and is not required for alternator functionality.
- The Terminal 15 (Ignition) provides excitation and **MUST** be connected.
- The L (Warning Lamp) is an option (when a warning lamp is fitted) and is not required

for alternator functionality.

- The alternator is fitted with two B+ terminals. Either of the B+ terminals can be used.
- The alternator is earth return (grounded) Ensure there is a good earth connection to the engine.

Note: The Prestolite 24 Volt 120 Amp Alternator connects to the '12V Ignition on Switched Terminal' shown on the Shire 70 Engine Wiring Diagram (See **1. Engine Wiring Diagram Shire 70 of Section 9 – Wiring Diagrams**).

A 12v ignition operated relay may be required to switch on the 24v supply to Terminal 15 if the alternator is a stand-alone item fitted to a 12v engine.

SECTION 10 – Technical Data

1. Engine Data

Engine Model	**Shire 70 - TNV98 ZNSA (SAE J1349, ISO 3046/1)**
Type	Vertical In-Line Diesel Engine
Combustion System	Direct Injection
Aspiration	Naturally
Number of Cylinders	4
Bore x Stroke	98 x 110mm
Displacement	3.319L
Rated Output/Speed	52kW (70hp) at 2500rpm
Low Idling	1000 rpm (when warm, 1300 rpm when cold)
High Idling	2600 ±25 rpm
Direction of Rotation	Counter clockwise, viewed from Flywheel End
Normal Oil Pressure at Rated Engine Speed	0.29 - 0.39 MPa / 2.9 – 3.9 bar / 42 – 56 psi
Normal Oil Pressure at Low Idle Speed	0.06 MPa / 0.6 bar / 8.7 psi
Electric Starting System	Starter Motor: DC12V
	Starter Capacity: 2.3kw
	Minimum Recommended Start Battery Capacity: 12V 75Ah
Valve Clearances (Exhaust and Inlet)	0.15 – 0.25mm

2. Return Diesel System

Maximum Fuel Temp	28.5°c
Maximum Flow	0.75 Litre/Min (2500 rpm)
Flow at Idle	0.65 Litre/Min

The flexible lines used on the engine comply with ISO 7840.

3. Dry Weight of Engine Data

Dry Weight of Engine (Including Gearbox)*	
Model	**Dry Weight (kg)**
Shire 70	375kg

* The dry weights stated are for the standard engine in each model range. If a different gearbox or additional alternators are ordered the weight will change accordingly.

SECTION 11 – Fault Diagnosis

1. Failure Indicator Flashing Pattern

- If a fault occurs with the engine, the failure indicator light **(Figure 23)** will start flashing. The sequence in which the failure indicator light starts to flash will indicate the fault that has occurred.
- If a fault occurs with the engine, please contact your Shire Dealer.

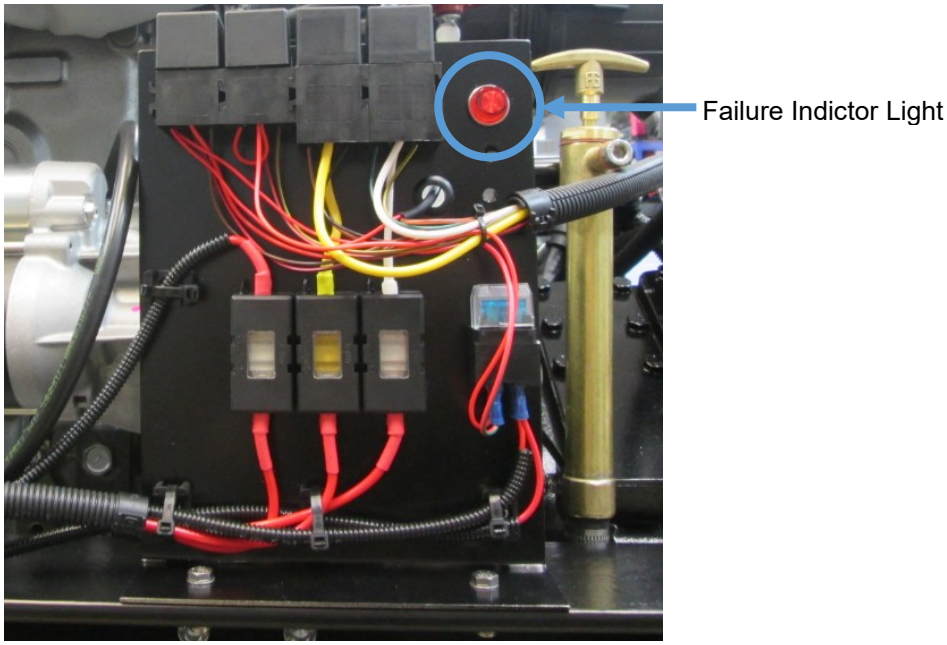

Figure 23: Failure Indicator Light

When the engine is started the failure indicator light will always come on for two seconds, whether or not any faults exist.

2. Examples Of Fault Code Light Sequences

- If an accelerator sensor failure is detected when the engine is started, the failure indicator light will flash in a pattern of five (equal flashes) as shown in **(Figure 24)**

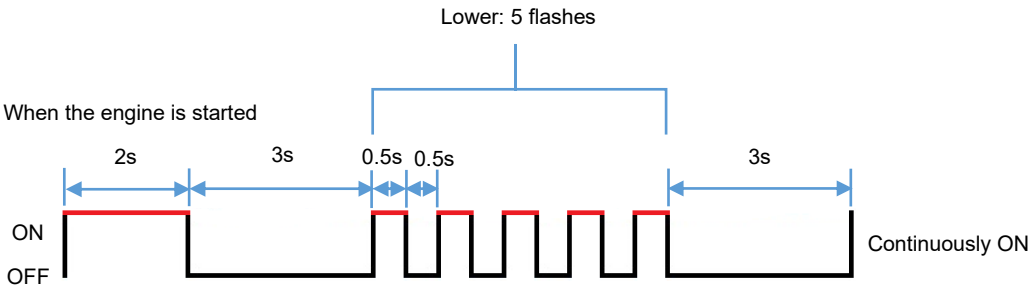

Figure 24: Accelerator Sensor Failure

- If an EGR valve failure is detected when the engine is started, the failure indicator light will flash in a pattern of thirteen (one long flash followed by 3 short flashes) as shown in **(Figure 25)**

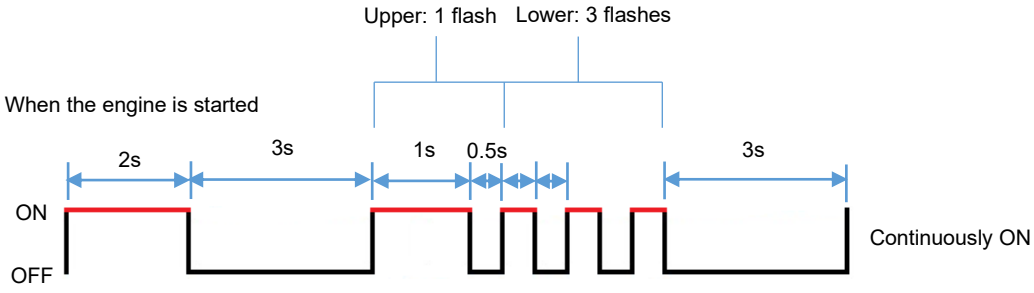

Figure 25: EGR Valve Failure

When two or more faults occur at the same time, the failure indicator light will indicate all the failures one by one in the ascending order of the number of flashes.

3. Fault Codes

Flashing Pattern	Fault Item		Fault Code
	Area	Status	
4	Cooling Water Temperature Sensor	Failure (Low Voltage)	P0117/4
		Failure (High Voltage)	P0118/3
5	Accelerator Sensor	Failure (Low Voltage)	P0122/4
		Failure (High Voltage)	P0123/3
		Intermittent Failure	P0124/2
		Lower Limit Error	P1125/1
		Upper Limit Error	P1126/0
6	Speed Sensor	Failure (Low Voltage)	P0340/4
7	Rack Position Sensor	Failure (Low Voltage)	P1202/4
		Failure (High Voltage)	P1202/3
8	Rack Actuator	Failure (Low Voltage)	P1212/4
		Failure (High Voltage)	P1213/3
		Mechanical Failure	P1211/7
9	Engine Overspeed		P0219/0
1-1	Spare Speed Sensor	Failure (Low Voltage)	P1340/4
1-2	Can Communication		U0001/12
1-3	EGR Step Motor	A-Phase Failure (Disconnection)	P1402/4
		A-Phase Failure (Short Circuit)	P1403/3
		B-Phase Failure (Disconnection)	P1412/4
		B-Phase Failure (Short Circuit)	P1413/3
		C-Phase Failure (Disconnection)	P1422/4
		C-Phase Failure (Short Circuit)	P1423/3
		D-Phase Failure (Disconnection)	P1432/4
		D-Phase Failure (Short Circuit)	P1433/3
1-4	CSD Solenoid Valve	Failure (Disconnection)	P1242/4
		Failure (Short Circuit)	P1243/3
		Intermittent Failure	P1244/2
1-5	Start Assist Relay	Failure (Disconnection)	P1232/4
		Failure (Short Circuit)	P1233/3
		Intermittent Failure	P1234/2
1-6	Self-Hold Relay	Failure (Low Voltage)	P0686/4

1-7	Rack Actuator Relay		Failure (Low Voltage)	P1222/4
			Failure (High Voltage)	P1223/3
			Intermittent Failure	P1224/2
1-8	Spare Accelerator Sensor		Failure (Low Voltage	P0222/4
			Failure (High Voltage)	P0223/3
			Intermittent Failure	P0224/2
			Lower Limit Error	P1225/1
			Upper Limit Error	P1226/0
			Communication Error	P1227/8
1-9	Atmospheric Pressure Sensor		Failure (Low Voltage)	P2228/4
			Failure (High Voltage)	P2229/3
			Intermittent Failure	P2230/2
2-1	Oil Pressure Switch		Failure (Disconnection)	P1192/4
2-2	Charge Switch		Failure (Disconnection)	P1562/4
2-3	ECU Supply Voltage		Lower Limit Error	P0562/1
			Upper Limit Error	P0563/0
2-4	Sensor 5V		Failure (Low Voltage)	P0642/4
			Failure (High Voltage)	P0643/3
			Intermittent Failure	P1644/2
2-5	ECU Internal Temperature		Rise Error	P0634/0
3-1	Oil Pressure		Lower Limit Error	P1198/1
3-2	Battery Charge		Lower Limit Error	P1568/1
3-3	Cooling Water Temperature		Error	P1217/0
3-4	Air Cleaner		Mechanical Failure	P1101/0
3-5	Oil-Water Separator		Mechanical Failure	P1151/0
3-6	Cooling Water Temperature		Rise Error	P0217/0
4-1	ECU Internal	Flash ROM		P0605/12
		EEPROM		P0601/12
		Sub CPU	CRC Error	P1610/12
			Send ACK Error	P1611/12
			Communication Error	P1612/12
		Map Format		P1620/12
		ECU Temperature Sensor	Failure (Low Voltage)	P0668/4
			Failure (High Voltage)	P0669/3
			Intermittent Failure	P1664/2

SECTION 12 – Dealer List

Area	Company	Telephone	Email
BERKSHIRE	Driveline Marine	0118 942 3877	tam@drivelinemarine.com
	Marcus Marine Engineering Ltd (Servicing, Repairs & Breakdowns only)	07900890911	Marcus@marcusmarine.co.uk
BRISTOL	Advance Marine	01275 815910	phil@advancemarine.co.uk
CHESHIRE	Aqueduct Marina	01270 525040	info@aqueductmarina.co.uk
	Midland Chandlers	01928 751 800	preston.brook@midlandchandlers.co.uk
	Nantwich Canal Centre Ltd	01270 625122	info@nantwichcc.com
CORNWALL	Black Dog Marine	01503 265898	blackdogmarine@googlemail.com
CUMBRIA	Windermere Aquatic Ltd	01539 442121	service@aquaticboatcentres.com
DERBYSHIRE	Midland Chandlers	01283 701445	willington@midlandchandlers.co.uk
DEVON	Sleeman & Hawken Ltd	01626 778266	sales@sleeman-hawken.co.uk
ESSEX	French Marine Motors Ltd	01206 305233 01255 850303	info@frenchmarine.com
HAMPSHIRE	Marine Power Ltd	0238 0403918	sales@marine-power.co.uk
HERTFORDSHIRE	Lee Valley Marina	01920 870499 01920 293101	stansteadmarina@vibrantpartnerships.co.uk
	Keypart Ltd	01923 276000	sales@keypart.com
LEICESTERSHIRE	Foxton Boat Services Ltd	01162 792285	foxtonboats@btinternet.com
LONDON	JSA Marine Services	07498 637995	james@jsamarineservices.com
	Lee Valley Marina	020 88061717	springfieldmarina@vibrantpartnerships.co.uk
MIDDLESEX	Lindon Lewis Marine	01932 247427	service@pushtheboatout.com
NORTHAMPTON-SHIRE	Grand Junction Boat Co.	01604 858043	info@boatrepairs.uk.com
	Midland Chandlers	01788 891401	braunston@midlandchandlers.co.uk
NOTTINGHAM	Farndon Marina	01636 705483	info@farndonmarina.co.uk
OXFORDSHIRE	Aynho Wharf	01869 338483	info@aynhowharf.co.uk
STAFFORDSHIRE	JD Boat Services Ltd	01902 791811	david@jdboats.co.uk
	Midland Chandlers	01785 712437	penkridge@midlandchandlers.co.uk
	River Canal Rescue	01785 785680	enquiries@rivercanalrescue.co.uk
	Stone Boatbuilding Company	01785 812688	stonechandlery@aol.com

	Streethay Wharf	01543 414808	office@streethaywharf.co.uk
WARWICKSHIRE	Springwood Haven Leisure Ltd	0845 4566572	enquiries@springwoodhaven.co.uk
	Fenny Compton Marina	01527 876438	enquiries@craftedboats.co.uk
WILTSHIRE	Devizes Marina	01380 725300	sales@devizesmarina.com
WORCESTERSHIRE	Crafted Boats Ltd	01527 876438	craftedboats@btconnect.com
	Evesham Marina	01386 768500	info@eveshammarina.co.uk
	Starline Narrowboats	01531 632003	enquiries@starlinenarrowboats.co.uk
YORKSHIRE	Rodley Boat Centre	01132 576132	rodleyboatcentre@msn.com
MONMOUTHSHIRE	Castle Narrowboats	01873 830001	info@castle.narrowboats.co.uk
EIRE	Southshore Marina & Diesel Ltd	028383 41010	info@southshoremarine.co.uk

SECTION 13 – Shire Service Parts

Primary Fuel Filter	RDG9188346
Engine Fuel Filter	119802-55801
50A Alternator	129423-77200
50A Alt Belt	GB/T12732-1996
240A Alternator	RDG2019682
240A Alt Belt	RDG0047498
3.5kW Alternator Belt (Option)	RDG0047600
5kW Alternator Belt (Option)	RDG0047600
Air Filter Element	RDG6613
Oil Filter	129150-35170

Control Panel:

Standard Control Panel	RDG20710110
Deluxe Control Panel	RDG20710111

'E' Kit:

3.5kW 'E' Kit Alternator Belt	RDG0047511
5kW 'E' Kit Alternator Belt	RDG0047511

Fuses:

The electrical system is fitted with two blade type fuses and three ceramic fuses:

	Shire 70
Engine Alternator	80 amp
Engine Pre Heat	80 amp
Engine Start	60 amp
Control Panel Supply	15 amp (RDG3245)
Main Permanent Live	10 amp (RDG1437)

Engine Oil:
Engine oil is available from Barrus in convenient 5 litre containers. The part number is RDG6110.

Diesel Fuel Additive:
Diesel fuel additive is available from your Shire Dealer in a handy 500ml container (Part No RDG80210219).

Shire Parts Book:
On the E.P Barrus Website there is a Shire 70 Parts Book which has a more extensive list of parts available for your engine. To access the Shire Parts Books on the internet, type the following short link into your search engine:

https://www.barrus.co.uk/divisions/marine/diesel/shire/downloads/shire-parts/?p=1

SECTION 14 – Afterlife Recycling

When it becomes necessary to dispose of your engine, it may be possible at recycling centres; however, it will likely require careful disassembly first before disposal. For further information, please contact your local recycling centres for disposal advice to see what they will accept for disposal.

Engines are primarily made up of steel, cast iron and aluminium; and are recyclable after removal of other parts. Larger components such as the engine block may only be handleable by a few centres, unlike say smaller plastic components.

Most of the other parts require special disposal as they include hazardous waste, and must be separate and declared upon disposal, including:

Fluid Disposal

You must make sure that all unused oil, fuel and coolant is drained out carefully and disposed of correctly at a local recycling centre. Under NO circumstance must any oil, fuel or coolant be put down any drains or leaked into waterways or the environment.

Contact local recycling centres or garages, or check their websites to find out whether they take or recycle engine fluids. If they don't, they may be able to direct you to your nearest drop-off point depending on the volume. Recycle your coolant/oil/fuel in distinct well-sealed containers that are clearly labelled.

Waste Electrical Electronic Equipment (WEEE) and Battery recycling

Parts contain WEEE waste or batteries should not be disposed of in your domestic waste. You should recycle WEEE or batteries in accordance with your local authority or recycling centre's directions. Batteries will need declaring separately for safety purposes.

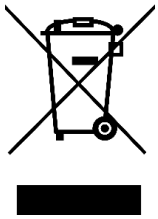

Packaging materials that are unwanted should be sorted, with cardboard, wood, and paper recycled where possible. Some Local Authorities and recycling centres may accept plastic bags, films and bubble wrap for recycling. Polystyrene is very rarely recycled and may have to be disposed of in general rubbish, inside bags.

Reduce, Reuse, Recycle

For further information about disposal, please contact your Local Authority.
You can also get more advice and guidance about recycling in your area at the following website http://www.recycle-more.co.uk.

SECTION 15 – Declarations

1. Declaration of Conformity for Recreational Craft Propulsion Engine with the requirements of Directive 2013/53/EU.

Name of Engine Manufacturer: **E.P.Barrus LTD**

Name of Authorised Representative: **E.P.Barrus LTD**
Address: **E.P.Barrus LTD, Launton Road, Bicester, Oxon, OX26 4UR, England, United Kingdom**

Name of Notified Body for exhaust emission assessment: HPi Verification Services (Ireland) Ltd
Address: HPi Verification Services (Ireland) Ltd, Clonross
Town: Dunshaughlin Post Code: A85 XN59
Country: Ireland ID Number: 2810

Conformity assessment module used for exhaust emissions: ☐ B+C ☐ B+D ☐ B+E ☐ B+F ☐ G ☐ H
Or engine type-approved according to: Directive 2013/53/EU
Other Community Directives applied:

Description of Engine(s) and Essential Requirements

Engine Type: Inboard Engine **Fuel Type**: Diesel **Combustion Cycle**: 4 Stroke

Identification of Engine(s) covered by this Declaration of Conformity

Engine Model	**Engine Type**	**Engine Family code**	**Type Approval Certificate Number**
Shire 70	4TNV98-ZNSA		HPiVS-iR1105-T006-I-01-00

Essential Requirements	Standards	Other normative document/method.	Technical file	Specify in more detail *= Mandatory standard.
Annex 1.B- Exhaust Emissions				
B.1 Engine Identification	☐	☑ RCD (**II**)	☑	2013/53 EU
B.2 Exhaust emission requirements	☑*	☐	☐	* EN ISO 8178
B.3 Durability	☐	☐	☐	2013/53 EU-4:2017 Test Cycle 1
B.4 Owner's Manual	☑	☐	☐	ISO10240
Annex 1. C- Noise Emissions	See Declaration of Conformity of the craft in which the engine(s) has(have) been installed			

This declaration of conformity is issued under the sole responsibility of the manufacturer. I declare on behalf of the engine manufacturer that the engine(s) [is (are) in conformity with the type(s) for which above mentioned EC type-examination or type approval certificate(s) has (have) been issued and][1] will meet the exhaust emission requirements of Directive 2013/53/EU when installed in a recreational craft, in accordance with the engine manufacturer's supplied instructions and that this (these) engine(s) must not be put into service until the recreational craft which it is (they are) to be installed has been declared in conformity with the relevant provisions of the above mentioned Directives.

Tim Hart
Sales Director
Signed: Bicester, UK
Date: 01/01/2021

2. Declaration of Conformity for Recreational Propulsion Engine with the requirements of the Recreational Craft Regulations 2017 (UKCA Marking).

Name of Engine Manufacturer: **E.P.Barrus LTD**

Name of Authorised Representative: **E.P.Barrus LTD**
Address: **E.P.Barrus LTD, Launton Road, Bicester, Oxon, OX26 4UR, England, United Kingdom**

Name of Notified Body for exhaust emission assessment: HPi CEproof Ltd
Address: HPi CEproof Ltd, The Manor House, Howbery Park
Town: Wallingford Post Code: OX10 8BA
Country: United Kingdom ID Number: 1521

Conformity assessment module used for exhaust emissions: ☐ B+C ☐ B+D ☐ B+E ☐ B+F ☐ G ☐ H
Or engine type-approved according to: Directive 2013/53/EU
Other Community Directives applied:

Description of Engine(s) and Essential Requirements

Engine Type: Inboard Engine **Fuel Type**: Diesel **Combustion Cycle**: 4 Stroke

Identification of Engine(s) covered by this Declaration of Conformity

Engine Model	**Engine Type**	**Engine Family code**	**Type Approval Certificate Number**
Shire 70	4TNV98-ZNSA		HPiUK-R1105-T006-I-01-00

Essential Requirements	Standards	Other normative document/method.	Technical file	Specify in more detail *= Mandatory standard.
Annex 1.B- Exhaust Emissions				
B.1 Engine Identification	☐	☑ RCD (**II**)	☑	2013/53 EU
B.2 Exhaust emission requirements	☑*	☐	☐	* EN ISO 8178-4:2017 Test Cycle 1
B.3 Durability	☐	☐	☐	2013/53 EU
B.4 Owner's Manual	☑	☐	☐	ISO10240
Annex 1. C- Noise Emissions	See Declaration of Conformity of the craft in which the engine(s) has(have) been installed			

This declaration of conformity is issued under the sole responsibility of the manufacturer. I declare on behalf of the engine manufacturer that the engine(s) [is (are) in conformity with the type(s) for which above mentioned EC type-examination or type approval certificate(s) has (have) been issued and][1] will meet the requirements of the Recreational Craft Regulations 2017 when installed in a recreational craft, in accordance with the engine manufacturer's supplied instructions and that this (these) engine(s) must not be put into service until the recreational craft which it is (they are) to be installed has been declared in conformity with the relevant provisions of the above mentioned Directives.

Tim Hart
Sales Director
Signed: Bicester, UK
Date: 07/07/2021

3. Declaration of Incorporation of Partly Completed Machinery

(Original declaration according to Directive 2006/42/EC, Annex II, part 1B)

1. The manufacturer:	E. P. Barrus Limited Glen Way Launton Road Bicester OX26 4UR England United Kingdom			
2. Authorised Compiler of Relevant Technical Documentation:	Mr. Wilfred Mobbs Glen Way Launton Road Bicester OX26 4UR England United Kingdom			
3. Partly Completed Machinery:	Designation:	Marine engines for propulsion of, and incorporation into, watercraft.		
	Description:		Serial No.:	and their derivatives.
		Shire 70	XX-2400-X	
	Base Engine:	Yanmar 4TNV98-ZNSA		
4. The essential health and safety requirements of the Directive 2006/42/EC, Annex I, relating to the design and construction of the engines have been applied and fulfilled as shown in Annex A of this Declaration. The relevant technical documentation is compiled in accordance with part B of Annex VII of the Directive. The engines also comply with Directive 2013/53/EU (Recreational Craft Directive), when installed in accordance with the installation instructions that accompany the engine.				
5. In case of a reasoned request by the national authority, we will supply the relevant technical information of the above named engines to the person in charge.				
6. This partly completed machinery must not be put into service until the final machinery into which it has been incorporated has been declared in conformity with the provisions of this directive, where appropriate.				
7. This declaration is made on 27 June 2022 in Bicester, Oxfordshire.				
 Tim Hart Sales Director E. P. Barrus Limited				

4. EU Declaration of Conformity with the Exhaust Emissions Requirements of Directive 2013/53EU

(Original declaration according to Directive 2013/53/EU)

<table>
<tr><td colspan="2">1. The manufacturer:</td><td colspan="4">E. P. Barrus Limited
Glen Way
Launton Road
Bicester
OX26 4UR</td></tr>
<tr><td colspan="2">2. Authorised Compiler of Relevant Technical Documentation:</td><td colspan="4">Mr. Wilfred Mobbs
Glen Way
Launton Road
Bicester
OX26 4UR</td></tr>
<tr><td colspan="2" rowspan="4">3. Partly Completed Machinery:</td><td>Designation:</td><td colspan="3">Marine engines for propulsion of, and incorporation into, watercraft.</td></tr>
<tr><td rowspan="2">Description:</td><td></td><td>Serial No.:</td><td rowspan="2">and their derivatives.</td></tr>
<tr><td>Shire 70</td><td>XX-2400-X</td></tr>
<tr><td>Base Engine:</td><td colspan="3">Yanmar 4TNV98-ZNSA</td></tr>
<tr><td colspan="6">4. The essential health and safety requirements of the Directive 2006/42/EC, Annex I, relating to the design and construction of the engines have been applied and fulfilled as shown in Annex A of this Declaration. The relevant technical documentation is compiled in accordance with part B of Annex VII of the Directive.
The engines also comply with Directive 2013/53/EU (Recreational Craft Directive), When installed in accordance with the installation instructions that accompany the engine.</td></tr>
<tr><td colspan="6">5. In case of a reasoned request by the national authority, we will supply the relevant technical information of the above named engines to the person in charge.</td></tr>
<tr><td colspan="6">6. This partly completed machinery must not be put into service until the final machinery into which it has been incorporated has been declared in conformity with the provisions of this directive, where appropriate.</td></tr>
<tr><td colspan="6">7. This declaration is made on 27 June 2022 in Bicester, Oxfordshire.</td></tr>
<tr><td colspan="6">
Tim Hart
Sales Director
E. P. Barrus Limited</td></tr>
</table>

SERVICE RECORD CARD

Model: .....

Engine No: .....

Carried out by E.P.Barrus **Print Name:** PDI **Actual Hours:** **Signed:**	**Boat Builder Stamp:** **Commission of Boat and Hand Over to Customer. (Refer to the Installation Check List Page in this Manual).** **Date:** **Signed:**
Dealer Stamp: 1st **Actual Hours:** **Signed:**	**Dealer Stamp:** 2nd **Actual Hours:** **Signed:**
Dealer Stamp: 3rd **Actual Hours:** **Signed:**	**Dealer Stamp:** 4th **Actual Hours:** **Signed:**
Dealer Stamp: 5th **Actual Hours:** **Signed:**	**Dealer Stamp:** 6th **Actual Hours:** **Signed:**

Please refer to Owner's Manual for service intervals