ORIGINAL INSTRUCTION

SHIRE CANAL ENGINE MANUAL

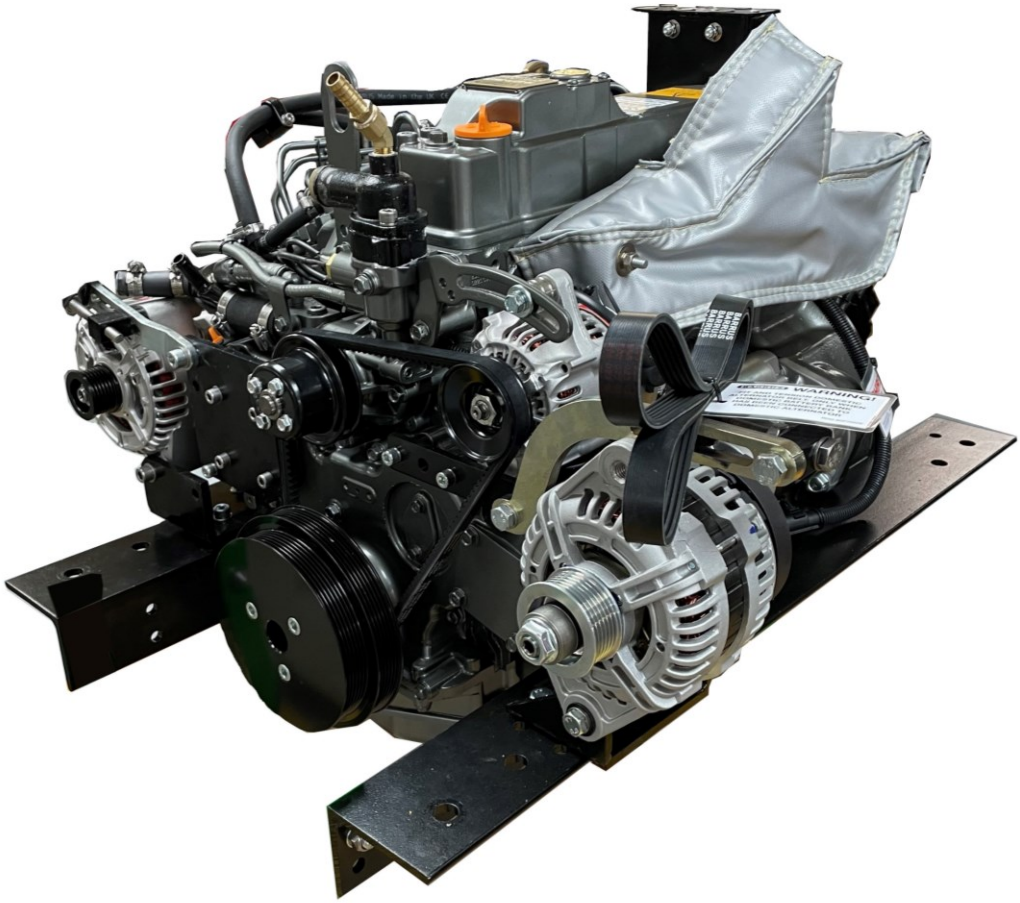

For the following engine models*:
Shire 50H

Addendum to the Shire 50 Engine Manual

*Standard Model, there may be a number of optional extras, or alternative components, that might be fitted to an engine that are not shown in this book.

Pump shipped dry. Fill hydraulic pump and system with hydraulic oil and reinstall plug.

RDG603B20 - Issue 1

Index

Page

SECTION 1 – Component Identification 3

SECTION 2 – Hydraulic Pump 4

SECTION 3 – Installation 6

SECTION 4 – Shire Parts 7

SECTION 5 – Dimensions 8

SCAN ME

To access the complete Shire Engine Manuals and Shire Parts Books on the internet type the following short links into your search engine or just scan the QR code above.

https://shireshop.co.uk/ - Shire Shop
https://www.barrus.co.uk/shire-manuals/ - Complete Shire Engine Manuals
https://www.barrus.co.uk/shire-parts/ - Shire Parts Books

SECTION 1 – Component Identification

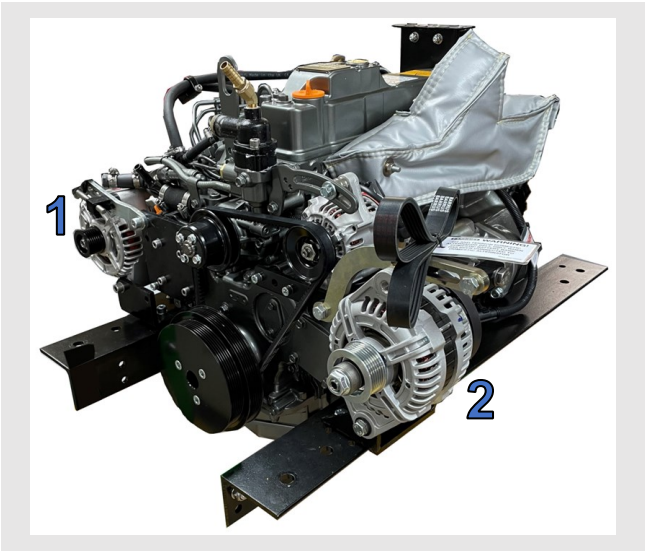

	Description**
1	170 Amp 12 Volt Alternator
2	3.5kW Mains 12 Volt Alternator

Figure 1: Shire 50 EDH 170 Left Side (Viewed from front)

	Description**
3	Hydraulic Pump
4	Primary Fuel Filter
5	Secondary Fuel Filter
6	Engine Sump Pump

Figure 2*: Shire 50 EDH 170 Right Side (Viewed from rear)

***Note**: The pump is upside-down in this photo.

****Note**: There are a number of other optional extras that may be fitted to an engine that are not shown here. The remote air filter is a standard option on this model.

SECTION 2 – Hydraulic Pump

Hydraulic Pump Specification (50H only)

Do not run the engine without any oil in the pump as this will permanently damage the pump.

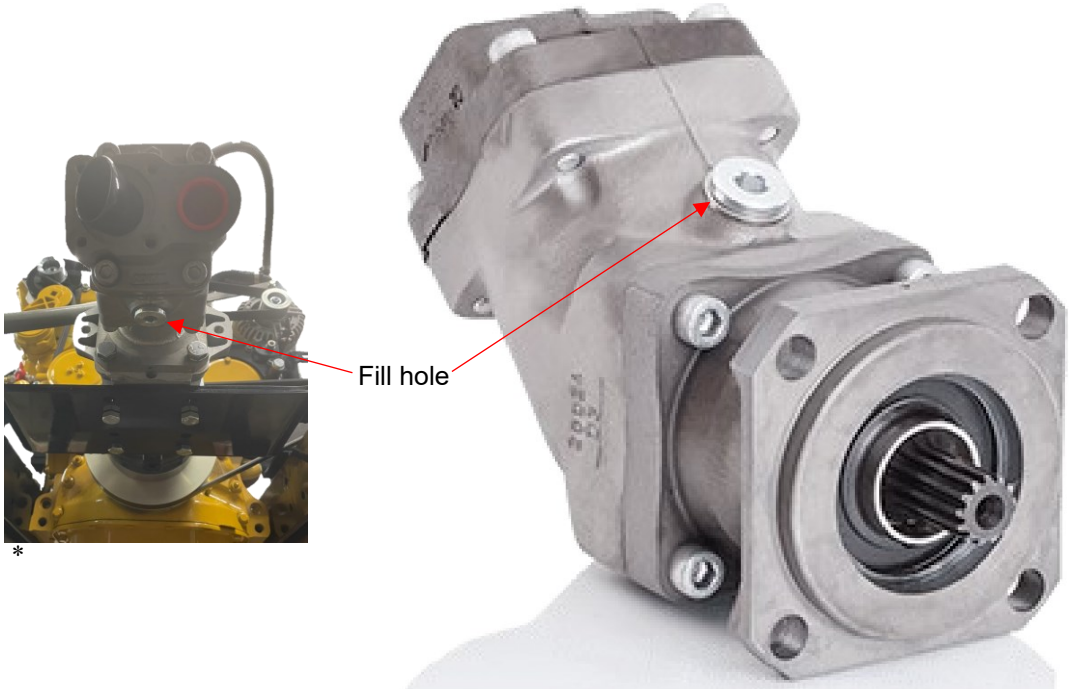

*

Hydraulic Pump - RDG907B6 (SCP-040R-N-SB4-B13-S0S-000)	
Flow Rate @500 RPM	21 L/min
Flow Rate @1000 RPM	41 L/min
Flow Rate @1500 RPM	62 L/min
Displacement	41.2 cc/r
Continuous Max Pump Speed	1900 RPM
Intermittent Max Pump Speed	2500 RPM
Max Working Pressure	400 Bar
Weight	12.3 kg
SAE Standard	SAE B 13T-16/32DP
Tare-Weight Torque	13 Nm

***Note**: The pump is shown on a shire 90 in this photo.

The Pump runs in a clockwise direction on the stern (rear) of the engine.

The hydraulic system must satisfy the demands on pipe sizes, filtering, etc. in accordance with **Sunfab's "General Instructions" 4001**.

The Pump Manufacturer recommends:

- The oil tank volume be:
    - At least equal to the oil flow (l/min.) with short working cycles.
    - At least 1.5 times the oil flow with long working cycles.
    - At least twice the oil flow in continuous operation.
- The following will be required to prevent foaming:
    - Return filter with canister.
    - Air filter.
    - Large, ventilated area.
    - Long distance between suction and return connections.
- The Oil Tank should preferably be placed so that the oil level is higher than the pump. Choose a large-bore suction line of the shortest possible length to avoid cavitation. If the suction pipe is more than 2m long the internal diameter must be increased by 10mm for each meter extension. Use of a suction strainer is advisable to catch coarse particles from the oil tank. Choose large-bore pressure and return lines to avoid pressure losses (heat generation).
- The following size lines.
    - Suction line – 50mm (2”)
    - Return line – 32mm (1¼”)
    - Pressure line – 25mm (1”)

NOTE! A pressure limiting valve with capacity for the intended flow must always fitted to the system. On removable equipment with quick connectors the pressure limiting valve must be installed before the quick connector.

- The impurity level of the oil should correspond to class 18/16/13 as set out in ISO 4406. Consequently, the hydraulic system is equipped with a return filter and air filter with a degree of filtration equal to 10 µm absolute. Furthermore, the hydraulic system should be equipped with a pressure filter if necessary.
- Change the filter after the first 50 hours of operation.
- Use a high-quality oil whose minimum technical properties conform to ISO type HM VG 32-68 depending on the ambient temperature. Alternatively, DIN 51524-2 HLP.
- For oil filling/ changing:
    - New hydraulic oil in a drum has too high an impurity level. Filling should therefore be done with the help of a filter unit or through the oil tank’s return filter.
    - Do not mix oil of a different quality, viscosity, or brand. This will impair the technical properties of the oil.
    - In the event of a pump breakdown: Change the oil or pass it through the filter unit and replace the filter cartridge before putting the pump back into service.
    - The oil should be changed about every 1000 running hours, though at least once a year. Change the filter cartridge as well.

The Drive Coupling used is RDG912B16, for connecting a 13T Spline to the SAE 7.5 Flywheel in a SAE 5 Housing with a full SAE offset.

SECTION 3 – Installation

NOTICE:

REFER TO THE SHIRE AND YANMAR MANUALS PRIOR TO INSTALLING THE ENGINE.

Hydraulic pump

The fill plug is on the underside of the pump and the housing is sent dry, therefore the pump needs removing to fill with oil.

- The M12 bolts that hold the pump onto the engine will require re-fitting with Loctite and torquing to 58ft-lb (78.4Nm).

Installing the pump

- Grease the splined shaft before installation. Use assembly paste for example Molykote G Rapid plus or similar.
- Do not tap the gear wheel/driver into position.
- **Gear wheel:** Use an M12 stud and sleeve.
- **Driver:** Use an M12 stud and washer.

Lock the gear wheel with a retaining ring or an M12 bolt and locking fluid.

Lock the O-ring and install the pump on the power take off.

Refer to Service Information 748 for installation with intermediate shaft.

Suction line

- Connect the suction line, tighten the suction connection bolts in diametric pairs.
- Tighten the hose with two robust hose clamps.
- Connect the pressure line.

WARNING! Tapered pressure connection not allowed. Only pressure connections with seal washer should be used.

WARNING!

When the pump is running:

1. Do not touch the pressure hose
2. Watch out for rotating parts
3. The pump and hoses may be hot

SECTION 4 – Shire Parts

Description	Part No.
3.5kW ‘E’ Kit Alternator Belt	RDG0047511
SAE 5 to SAE 7.5 Coupling	RDG912B16

Shire Parts Book:

On the E.P Barrus Website there is a Shire 50 Parts Book which has a more extensive list of parts available for your engine. To access the Shire Parts Books on the internet, type the following short link into your search engine:

https://www.barrus.co.uk/divisions/marine/diesel/shire/downloads/shire-parts/?p=1
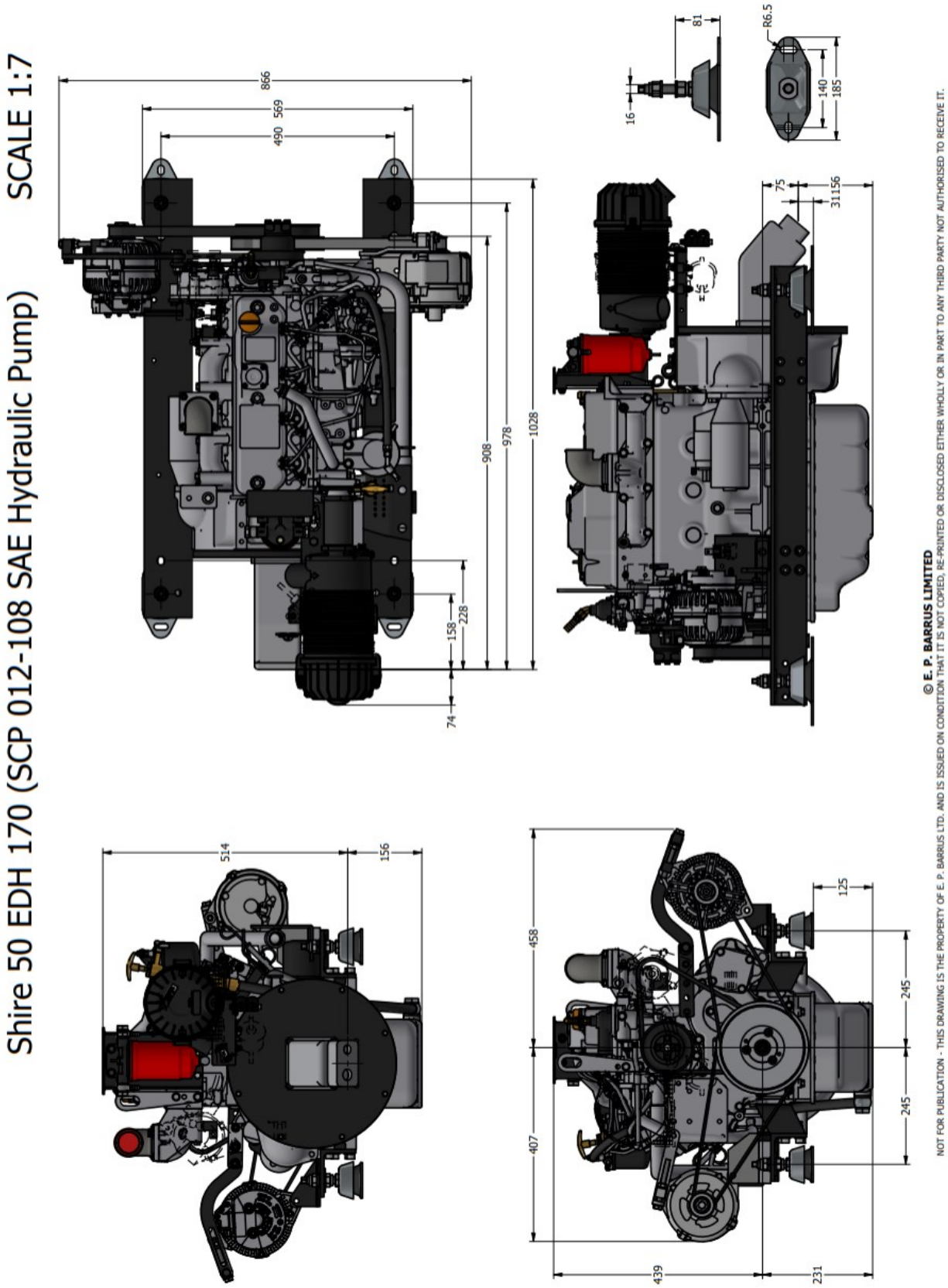
SECTION 5 – Dimensions