ORIGINAL PARTS BOOK

SHIRE PARTS BOOK

For the following engine model*:
Shire 43

*Standard Model, there may be a number of optional extras, or alternative components, that may be fitted to an engine that are not shown in this book

RDG603A66 - Issue 6 - Issued 27/09/2023

Index

Page

Service Parts 4
Consumables 5
Control Panel Parts 6
Electrical Parts 8
Gearbox Parts 10
Pumps 11
Thermostat Parts 12
Header Tank Parts 13
Engine Mount Parts 14
Exhaust Manifold Blankets 15
Engine Parts: Injectors 16
Engine Parts: Glowplugs 17
Engine Parts: Fuel Injection Pump 18
Engine Parts: Rocker Cover Gasket & Oil Cap 19
Engine Parts: Cylinder Head Gasket 20
Engine Parts: Oil Pan Gasket 21
Accessories: Exhaust Equipment 22
Accessories: Sterngear 23
Accessories: Couplings 24
Accessories: Propellers 25
Accessories: Lever Controller 26
Dealer List 27

On the E.P Barrus Website there is a Shire 39 Parts Book, Shire 43 Parts Book and Shire 49 Parts Book which has a more extensive list of parts available for your engine. To access the Shire Parts Books on the internet, type the following short link into your search engine:

https://www.barrus.co.uk/divisions/marine/diesel/shire/downloads/shire-parts/?p=1

For the Shire Shop, visit:

https://shireshop.co.uk/

Service Parts

	Description	Part No.	Model
	Primary Fuel Filter	RDG9188346	Shire 43
	Secondary Fuel Filter	RDG9188345	Shire 43
	Air Filter Element	RDG5795	Shire 43
	Oil Filter	R300010120001	Shire 43
	Fuel Filter Drain Screw	RDG9189022	Shire 43
	40A Alternator Belt	RDG0047496	Shire 43
	125A Alternator Belt	RDG6076	Shire 43
	150A Alternator Belt	RDG2254	Shire 43
	170A Alternator Belt	RDG6076	Shire 43

Consumables

	Description	Part No.	Model
	Engine Oil 15W-40 20L Container	VC83070-020	Shire 43
	PRM 150 Oil 10W40 CD 5L Container	RDG6110	Shire 43
	Diesel Fuel Additive 500ml Container	RDG80210219	Shire 43

Control Panel Parts

	Description	Part No.	Model
	Basic Control Panel	RDG207A16	Shire 43 (Option)
	Standard Control Panel	RDG20710110	Shire 43
	Deluxe Control Panel	RDG20710111	Shire 43 (Option)
	Ignition Switch	RDG215A5	Shire 43
	Ignition Key (for switch RDG215A5)	RDG215A196	All
	Tacho Gauge	RDG20710158	Shire 43
	Oil Pressure Gauge	RDG21710160	Shire 43
	Voltmeter Gauge	RDG21710161	Shire 43

	Water Temperature Gauge	RDG21710159	Shire 43
	Control Panel Warning Light	RDG20910163	Shire 43

Electrical Parts

	Description	Part No.	Model
	Extension Loom (2.3m)	RDG4041	Shire 43
No Image	40A Alternator	R300037010003	Shire 43
	125A Alternator	128990-77250	Shire 43
	170A Alternator	RDG201A29	Shire 43
No Image	Starter Motor	R300037080001	Shire 43
	Electric Fuel Pump	RDG504A90	Shire 43
	Water Temperature Sensor / Switch	RDG2189446	Shire 43 (Option)
	3/8” BSPT to M14 x 1.5 Adaptor (Also required with part above)	RDG3059814	Shire 43 (option)

	Oil Pressure Switch	114250-39450	Shire 43
	Oil Pressure Switch / Sensor	RDG2189445	Shire 43 (Optional Deluxe Panel)
No Image	Cold Start Sensor	R7100-3823180SF1	Shire 43
	Engine Stop Control System Fuse (40 Amp)	RDG3246	Shire 43
	Control Panel Supply Fuse (15 Amp)	RDG3245	Shire 43
	Engine Start Control System Fuse (15 Amp)	RDG3245	Shire 43
	Glow Plug Fuse (40 Amp)	RDG3246	Shire 43
	Starter Relay	RDG1396	Shire 43
	Cold Start Relay	RDG5279	Shire 43

Gearbox Parts

	Description	Part No.	Model
	Damper Drive Plate for PRM 150 D2 / D3	RDG1766	Shire 43
	Shire 60 Drive Coupling (Optional Heavy Duty Damper for PRM 150 Gearbox)	RDG912A37	Shire 43
	PRM 150 D2 Gearbox	RDG1765	Shire 43
	Gearbox Oil Cooler	RDG909A19	Shire 43
	Gearbox Oil Cooler Hose (Long)	RDG303A15	Shire 43
	Gearbox Oil Cooler Hose (Short)	RDG3017339	Shire 43

Pumps

	Description	Part No.	Model
	Sump Pump ¾”	RDG303A12	Shire 43

Thermostat Parts

	Description	Part No.	Model
	Thermostat (82°)	R7100-1306004SF1	Shire 43
	Thermostat (86°)	RDG909A7	All
	Thermostat Gasket	129350-49541	Shire 43

Header Tank Parts

	Description	Part No.	Model
	Header Tank	RDG6364	Shire 43
	Header Tank Cap	RDG1723	Shire 43
	Header Tank Hose	RDG3310	Shire 43

Engine Mount Parts

	Description	Part No.	Model
	Engine Mount	RDG3033	Shire 43
	Engine Mount Stud Kit	RDG1867	Shire 43

Exhaust Manifold Blankets

	Description	Part No.	Model
	Upper Exhaust Blanket	RDG904A68	Shire 43
	Lower Exhaust Blanket	RDG403A33	Shire 43

Engine Parts: Injectors

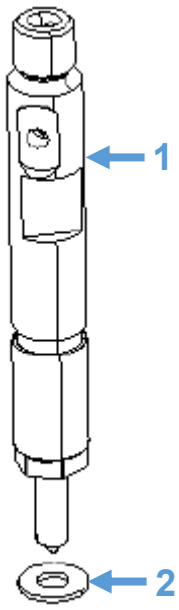

Diagram No.	Description	Part No.	Model
1	Injector	R300011120002	Shire 43
2	Injector Gasket	R300011120001	Shire 43

Engine Parts: Glowplugs

Diagram No.	Description	Part No.	Model
1	Glowplug	R3000-3823740	Shire 43

Engine Parts: Fuel Injection Pump

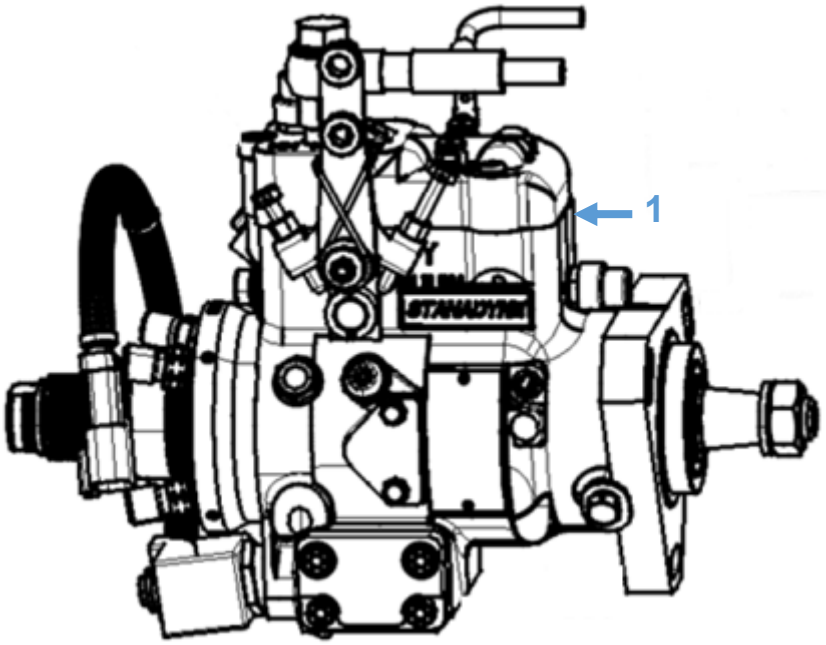

Diagram No.	Description	Part No.	Model
1	Fuel Injection Pump	R909111110001	Shire 43

Engine Parts: Rocker Cover Gasket & Oil Cap

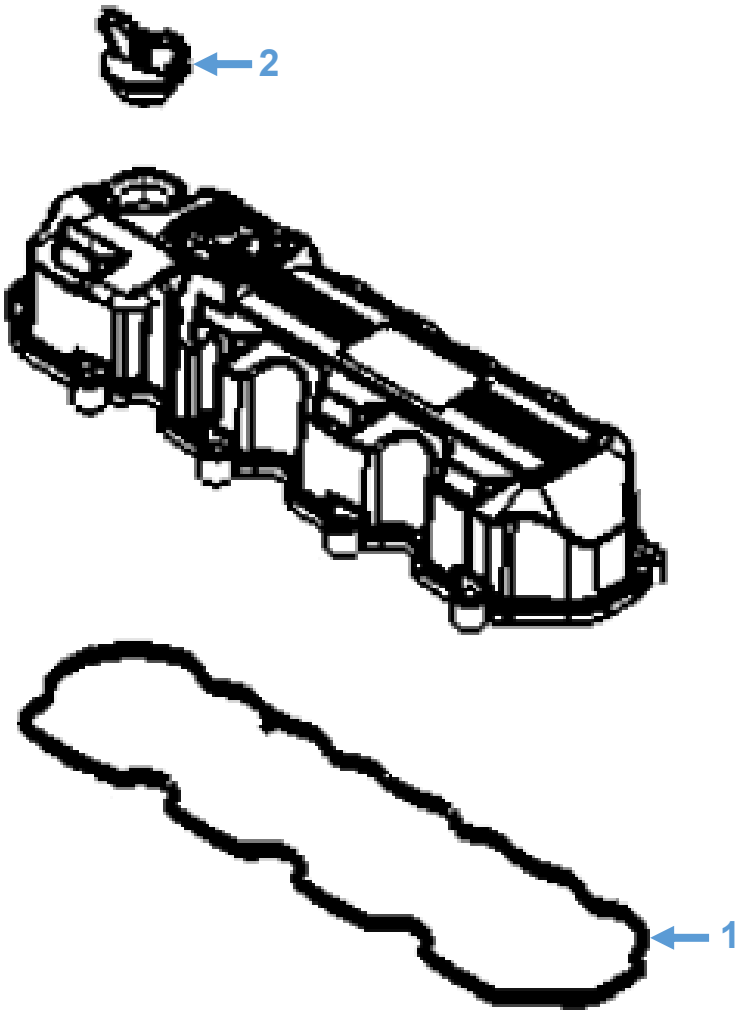

Diagram No.	Description	Part No.	Model
1	Rocker Cover Gasket	R3000100300023	Shire 43
2	Oil Cap	R3000100300024	Shire 43

Engine Parts: Cylinder Head Gasket

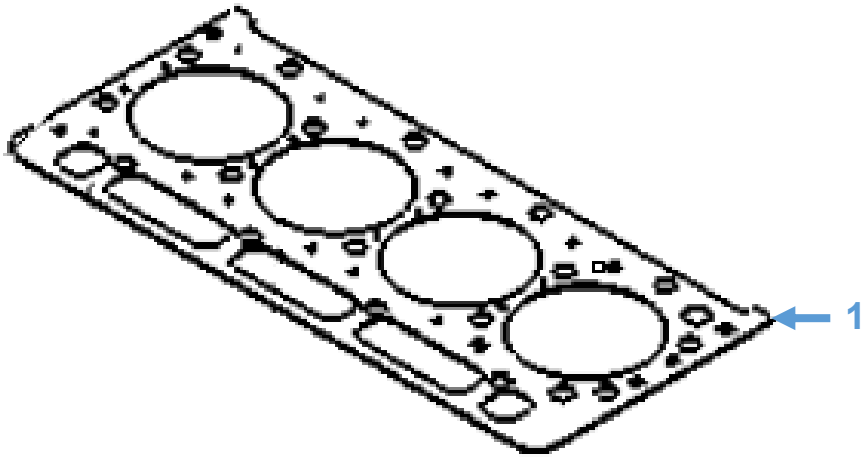

Diagram No.	Description	Part No.	Model
1	Cylinder Head Gasket	R3000100300019	Shire 43

Engine Parts: Oil Pan Gasket

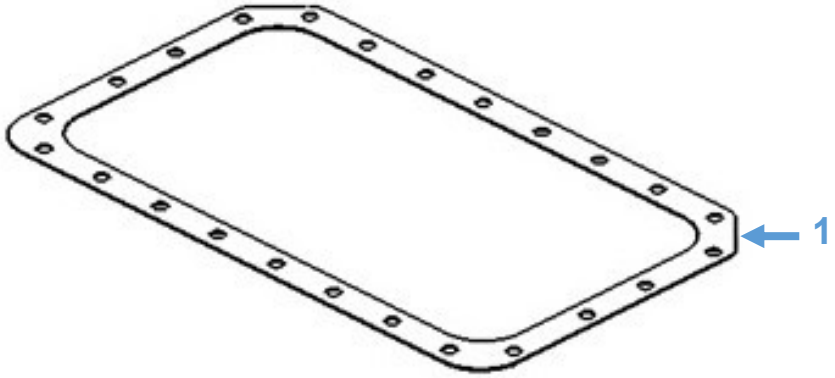

Diagram No.	Description	Part No.	Model
1	Oil Pan Gasket	R300010090001	Shire 43

Accessories: Exhaust Equipment

	Description	Part No.	Model
	Exhaust Coupling 1.5”	RDG1916	All
	Flexible Exhaust Pipe Blanket	RDG2477	All
	Flexible Exhaust 1.5”	RDG1879	All
	Dry Exhaust Silencer 1.5”	RDG1911	All
	Hospital Silencer 1.5”	RDG6536	All
	90° F/F Elbow 1.5” BSP	RDG5898	All

Accessories: Sterngear

	Description	Part No.	Model
	30” x 1.5” Diameter Propeller Shaft	EPB3841	All
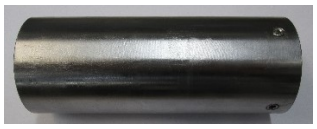	Weldable Sterntube	EPB5534	All
	Flexible Shaft Seal (to suit 1.5” shaft)	EPB5536	All

Accessories: Couplings

	Description	Part No.	Model
	R&D Flexible Coupling Disc	RDG9129347	All
	R&D Split Boss Clamp Coupling (for 1½" propeller shaft)	RDG1079349	All
	Centaflex Type 16 Coupling 1.5"	RDG2779	All

Accessories: Propellers

Description	Part No.	Model
19” x 12” 3 Blade Propeller	19X123PB	All*

Suitable for a 1.5” Shaft

Accessories: Lever Controller

	Description	Part No.	Model
	Single Lever Control Unit (side mounted)	RDG92010055	All
	3 Metre Cable	RDG92010056	All

Dealer List

Area	Company	Telephone	Email
BERKSHIRE	Driveline Marine	0118 942 3877	tam@drivelinemarine.com
	Marcus Marine Engineering Ltd (Servicing, Repairs & Breakdowns only)	07900890911	Marcus@marcusmarine.co.uk
BRISTOL	Advance Marine	01275 815910	phil@advancemarine.co.uk
CHESHIRE	Midland Chandlers	01928 751 800	preston.brook@midlandchandlers.co.uk
	Nantwich Canal Centre Ltd	01270 625122	info@nantwichcc.com
CUMBRIA	Windermere Aquatic Ltd	01539 442121	service@aquaticboatcentres.com
DERBYSHIRE	Midland Chandlers	01283 701445	willington@midlandchandlers.co.uk
DEVON	Sleeman & Hawken Ltd	01626 778266	sales@sleeman-hawken.co.uk
ESSEX	French Marine Motors Ltd	01206 305233 01255 850303	info@frenchmarine.com
HAMPSHIRE	Marine Power Ltd	0238 0403918	sales@marine-power.co.uk
HERTFORDSHIRE	Lee Valley Marina	01920 870499 01920 293101	stansteadmarina@vibrantpartnerships.co.uk
	Keypart Ltd	01923 276000	sales@keypart.com
LEICESTERSHIRE	Foxton Boat Services Ltd	01162 792285	foxtonboats@btinternet.com
LONDON	Lee Valley Marina	020 88061717	springfieldmarina@vibrantpartnerships.co.uk
MIDDLESEX	Lindon Lewis Marine	01932 247427	service@pushtheboatout.com
NORTHAMPTON	Grand Junction Boat Co.	01604 858043	info@boatrepairs.uk.com
	Midland Chandlers	01788 891401	braunston@midlandchandlers.co.uk
NOTTINGHAM	Farndon Marina	01636 705483	info@farndonmarina.co.uk
STAFFORDSHIRE	JD Boat Services Ltd	01902 791811	david@jdboats.co.uk
	Midland Chandlers	01785 712437	penkridge@midlandchandlers.co.uk
	River Canal Rescue	01785 785680	enquiries@rivercanalrescue.co.uk
	Stone Boatbuilding Company	01785 812688	stonechandlery@aol.com
	Streethay Wharf	01543 414808	office@streethaywharf.co.uk
WARWICKSHIRE	Springwood Haven Leisure Ltd	0845 4566572	enquiries@springwoodhaven.co.uk
WILTSHIRE	Devizes Marina	01380 725300	sales@devizesmarina.com

WORCESTERSHIRE	Crafted Boats Ltd	01527 876438	craftedboats@btconnect.com
	Evesham Marina	01386 768500	info@eveshammarina.co.uk
	Starline Narrowboats	01531 632003	enquiries@starlinenarrowboats.co.uk
YORKSHIRE	Rodley Boat Centre	01132 576132	rodleyboatcentre@msn.com
MONMOUTHSHIRE	Castle Narrowboats	01873 830001	info@castle.narrowboats.co.uk
EIRE	Southshore Marina & Diesel Ltd	028383 41010	info@southshoremarine.co.uk