ORIGINAL PARTS BOOK

SHIRE PARTS BOOK

For the following engine models*:

Shire 06 90
Shire 09 90
Shire 11 90
Shire 12 90
Shire 14 90
Shire 90

*Standard Model, there may be a number of optional extras, or alternative components, that may be fitted to an engine that are not shown in this book.

RDG603A43 - Issue 13 – Issued 06/05/2025

Index

Page

Base Engine Model 3
Service Parts 4
Belts 5
Consumables 5
Control Panel Parts 6
Electrical Parts 8
Gearbox Parts 10
Pumps 11
Thermostat Parts 11
Header Tank Parts 12
'E' Kit Parts 12
Engine Mount Parts 13
Exhaust Manifold Blankets 13
Engine Parts: Injectors 14
Engine Parts: Fuel Injection Pump 15
Engine Parts: Rocker Cover Gasket & Oil Cap 16
Engine Parts: Cylinder Head Gasket 17
Accessories: Exhaust Equipment 18
Accessories: Sterngear 19
Accessories: Couplings 19
Accessories: Propellers 20
Accessories: Lever Controller 21
Dealer List 22
Manuals & Brochures 23

Base Engine Model

Shire Model	Base Engine
Shire 06 90	4045DF270
Shire 09 90	4045DF270
Shire 11 90	4045DF270
Shire 12 90	4045DF270
Shire 14 90	4045DF270
Shire 90	4045TF280

On the E.P Barrus Website there is a Shire 90 Parts Book which has a more extensive list of parts available for your engine. To access the Shire Parts Books on the internet, type the following short link into your search engine:

https://www.barrus.co.uk/divisions/marine/diesel/shire/downloads/shire-parts/?p=1

For the Shire Shop, visit:

https://shireshop.co.uk/

Service Parts

	Description	Part No.	Model
	Primary Fuel Filter	RDG3026	Shire 06 90 Shire 09 90 Shire 11 90 Shire 12 90
	Primary Fuel Filter	RDG9188346	Shire 14 90 Shire 90
	Fuel Filter Drain Screw (black rubber washer supplied with filter)	RDG9189022	Shire 14 90 Shire 90
	Secondary Fuel Filter	RE62418	All
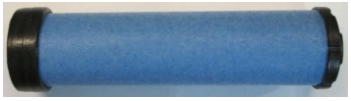	Inner Air Filter Element	RDG6651	All
	Air Filter Element	RDG6650	All
	Oil Filter	RE504836	All

Belts

	Alternator Main Drive Belt	RDG0047272	All
	50A 24V Alternator Belt	R500277	Shire 11 90
	55A 24V Alternator Belt	RDG0047600	Shire 11 90
	80A 24V Alternator Belt	RDG0047983	Shire 06 90 Shire 09 90 Shire 11 90

Consumables

	Description	Part No.	Model
	Engine Oil 15W-40 20L Container	VC83070-020	All
	Diesel Fuel Additive 500ml Container	RDG80210219	All
	Gearbox Oil 5L CD Container	RDG6110	All
	Engine Coolant 20L Container	EPH76215-020	All

Control Panel Parts

*** The Shire 11 90 and earlier models used a VDO panel which is no longer available. If the Control Panel or any of the parts on it require replacement the newer Standard/Deluxe Control Panel would be required.**

	Description	Part No.	Model
	Deluxe Control Panel	RDG20710111	All*
	Ignition Switch	RDG215A5	All
	Ignition Key (for switch RDG215A5)	RDG215A196	All
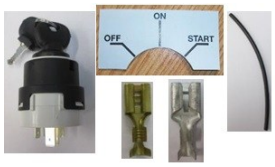	Ignition Switch Kit (to replace ignition switches fitted before 2016)	RDG215A6 (SS1626)	All
	Tacho Gauge	RDG20710158	All (Only on the panel listed above)
	Oil Pressure Gauge	RDG21710160	All (Only on the panel listed above)
	Voltmeter Gauge	RDG21710161	All (Only on the panel listed above)

	Water Temperature Gauge	RDG21710159	All (Only on the panel listed above)
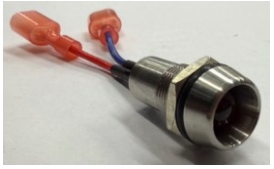	Control Panel Warning Light	RDG20910163	All (Only on the panel listed above)
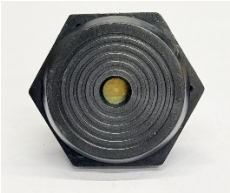	Buzzer	RDG21610164	All
	Panel Relay	RDG21410167	All
	Resistor 68 Ohm	RDG22010171 RDG220A1	All
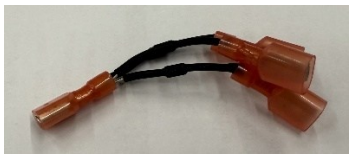	Diode Pack	RDG22310165	All
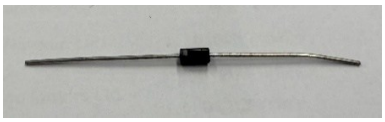	Single Diode	RDG22310166	All

Electrical Parts

	Description	Part No.	Model
	Extension Loom (2.3m)	RDG4041	All
	120A Alternator	RE533654	All
	110A Alternator	RDG5725 - No longer available (Use RDG20110201)	Shire 06 90 Shire 09 90 Shire 11 90
	150A Alternator (For Shire 14 90, Shire 12 90, 140A Alternator originally supplied but is no longer available) **NOTE: If a replacement alternator is fitted, you need to order a new pulley (RDG908A21) & spacer (RDG106A43) to fit on the new alternator. Ensure that all cables are of the correct cross-sectional area when fitting a new alternator.**	RDG20110201	Shire 12 90 Shire 14 90 Shire 90
	240A Alternator	RDG2019682	Shire 35

	120A 24V Alternator (Optional leisure alternator)	RDG201A11	All (Optional extra)
	Plug for 24V Alternator	RDG210A6	All
	Starter Motor	RE549296	All
	Water Temperature Switch / Sensor	RDG6786	Shire 06 90 Shire 09 90 Shire 11 90
	Water Temperature Sender and Switch	RDG2189446	Shire 12 90 Shire 14 90 Shire 90
	Oil Pressure Sensor	RDG6752	Shire 06 90 Shire 09 90
	Yanmar Oil Pressure Switch	114250-39450	Shire 06 90 Shire 09 90
	Oil Pressure Switch / Sensor	RDG2189445	Shire 11 90 Shire 12 90 Shire 14 90 Shire 90
	Control Panel Supply and Engine Start Control System Fuse (25 Amp)	RDG1152	All

	Starter Relay	RDG1396	All

Gearbox Parts

	Description	Part No.	Model
	Damper Drive Plate for PRM 260 D2 / D3	RDG6235 – No longer available (Use RDG5002)	Shire 06 90 Shire 09 90 Shire 11 90 Shire 12 90
	Damper Plate for 260 / 280 D2 /D3	RDG5002	Shire 14 90 Shire 90
	PRM 280 D2 / D3 Gearbox (This replaces the PRM 260 D2 Gearbox fitted on Shire 06 90, Shire 09 90, Shire 11 90, Shire 12 90, Shire 14 90)	RDG914A25 (D2) RDG914A220 (D3)	All
	Gearbox Oil Cooler	RDG9097231	All (Serial No 000001 to 9002542)
	Gearbox Oil Cooler	RDG909A12	Shire 90 (Serial No 9002542 onwards)
	Gearbox Oil Cooler Hose (Long)	RDG3017340	All

	Gearbox Oil Cooler Hose (Short)	RDG3017339	All

Pumps

	Description	Part No.	Model
	Sump Pump	RDG1461	All
	Gearbox Pump	RDG2837	All

Thermostat Parts

	Description	Part No.	Model
	Thermostat (71°)	DZ100555	All
	Thermostat Gasket	R502814	All

Header Tank Parts

	Description	Part No.	Model
	Header Tank	RDG6364	All
	Header Tank Cap	RDG1723	All
	Header Tank Hose	RDG3310	All

‘E’ Kit Parts

	Description	Part No.	Model
	3.5kW ‘E’ Kit Alternator Belt	RDG0047581	All
	5kW ‘E’ Kit Alternator Belt	RDG6816	All

Engine Mount Parts

	Description	Part No.	Model
	Engine Mount	RDG0057319	All
	Engine Mount Stud Kit	RDG1867	All

Exhaust Manifold Blankets

	Description	Part No.	Model
	Exhaust Blanket	RDG6986	Shire 06 90 Shire 09 90 Shire 11 90 Shire 12 90 Shire 14 90
	Exhaust Blanket	RDG904A49	Shire 90
	Turbo Blanket	RDG904A50	Shire 90

Engine Parts: Injectors

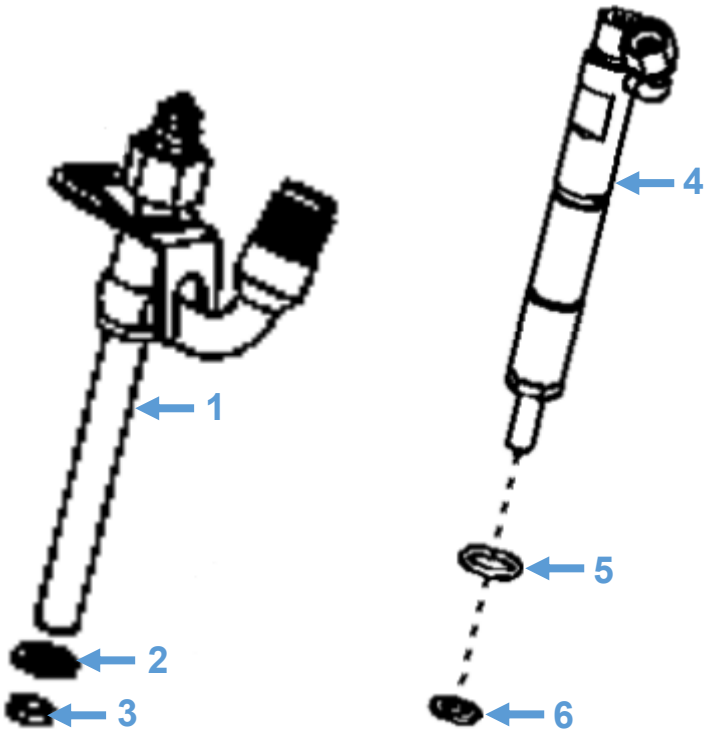

Diagram No.	Description	Part No.	Model
1	Injector	RE519569	Shire 06 90 Shire 09 90 Shire 11 90 Shire 12 90 Shire 14 90
2	Packing	R92352	Shire 06 90 Shire 09 90 Shire 11 90 Shire 12 90 Shire 14 90
3	Washer	R500390	Shire 06 90 Shire 09 90 Shire 11 90 Shire 12 90 Shire 14 90
4	Injector	RE531801	Shire 90
5	O-Ring	R56464	Shire 90
6	Washer	R524623	Shire 90

Engine Parts: Fuel Injection Pump

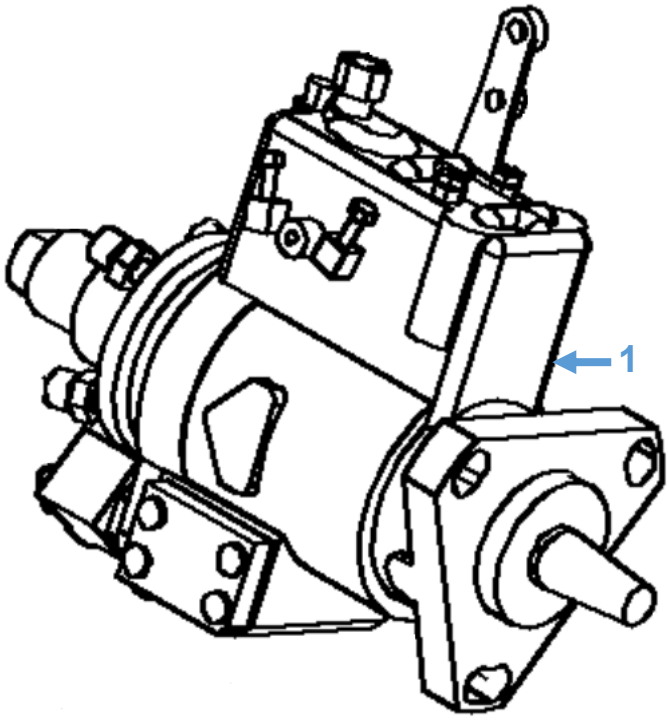

Diagram No.	Description	Part No.	Model
1	Fuel Injection Pump	RE519021	Shire 06 90 Shire 09 90 Shire 11 90 Shire 12 90 Shire 14 90
		RE533479	Shire 90

Engine Parts: Rocker Cover Gasket & Oil Cap

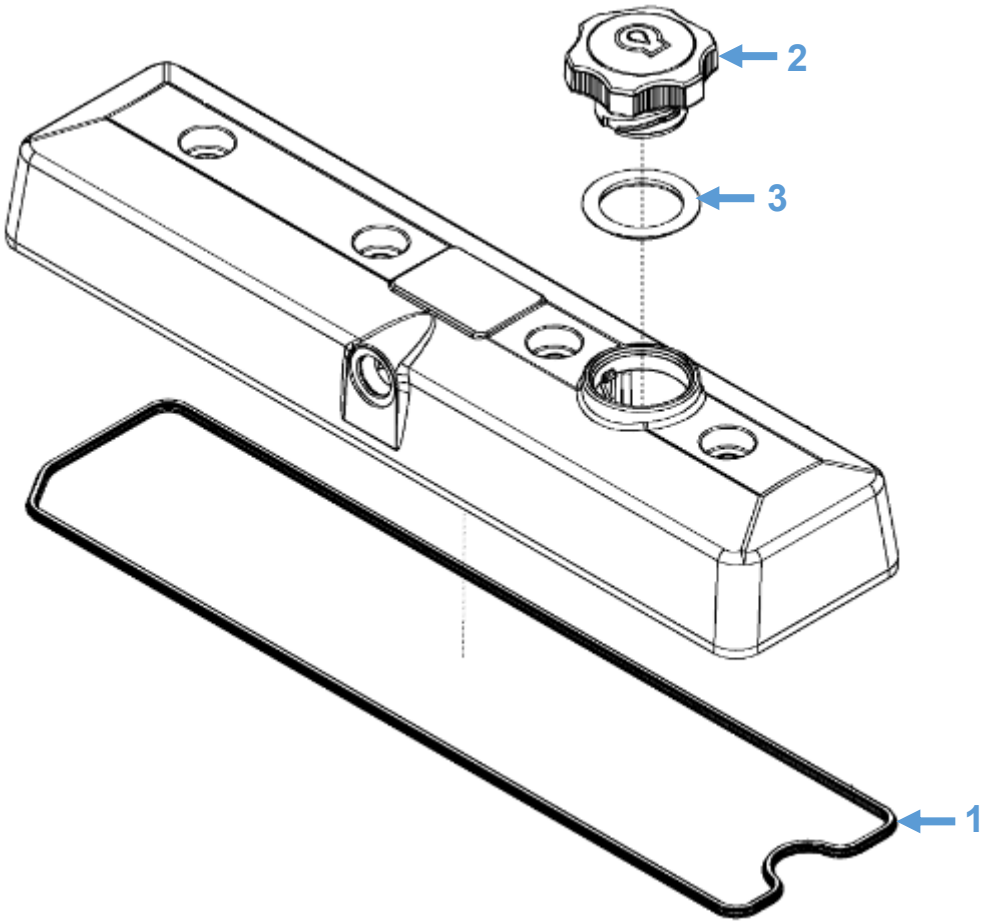

Diagram No.	Description	Part No.	Model
1	Rocker Cover Gasket	R524480	All
2	Oil Cap	RE535560	All
3	Oil Cap O-Ring	R502902	All

Engine Parts: Cylinder Head Gasket

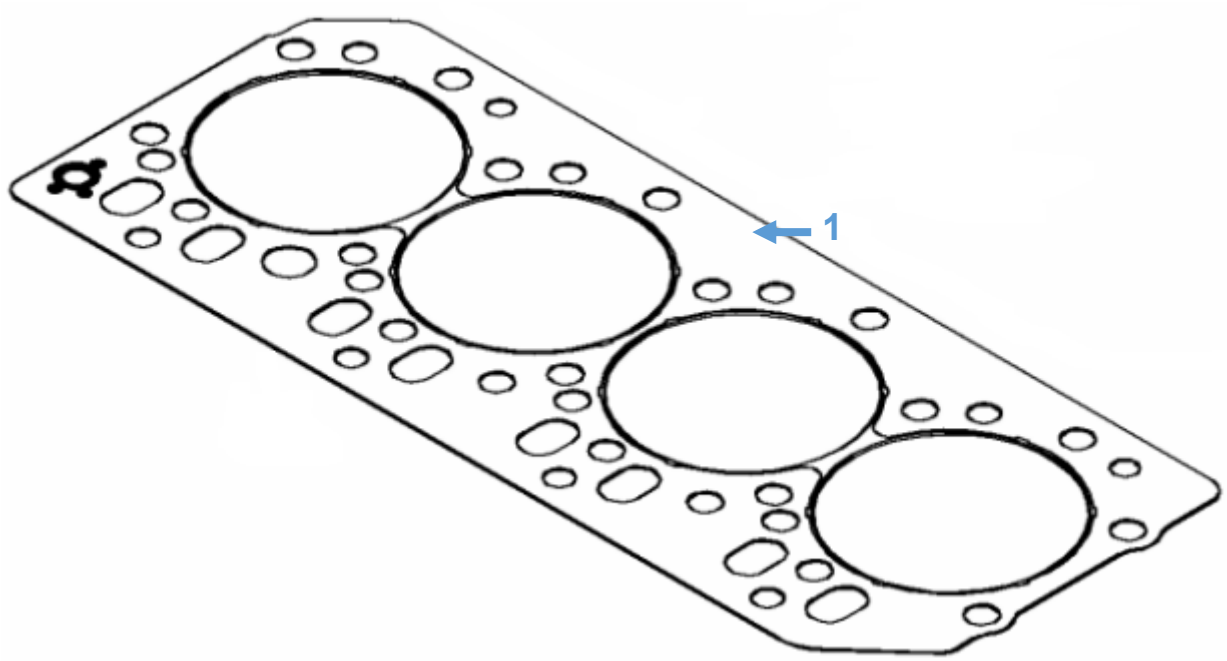

Diagram No.	Description	Part No.	Model
1	Cylinder Head Gasket	R116515	All

Accessories: Exhaust Equipment

	Description	Part No.	Model
	Flexible Exhaust Pipe Blanket	RDG9047331	All
	Flexible Exhaust Pipe 2.5”	RDG3017410	All
	Exhaust Coupling 2.5”	RDG9047504	All
	Hospital Silencer 2.5”	RDG9047445	All
	2 1/2” BSP 90 Elbow	RDG9047502	All

Accessories: Sterngear

	Description	Part No.	Model
	30” x 1.5” Diameter Propeller Shaft (12:1 Taper)	EPB3841	All
	35” x 1.5” Diameter Propeller Shaft	EPB5615	All
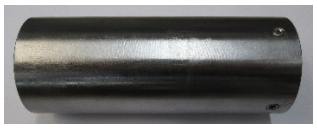	Weldable Sterntube	EPB5534	All
	Flexible Shaft Seal (to suit 1.5” shaft)	EPB5536	All

Accessories: Couplings

	Description	Part No.	Model
	R&D Flexible Coupling Disc 5” Flange PRM 260 / 280	RDG9126579	All
	R&D Split Boss Clamp Coupling 5” Flange PRM 260 / 280	RDG9129923	All
	Centaflex Type 16 Coupling 1.5”	RDG2779	All

Accessories: Propellers

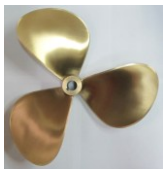

Description	Part No.	Model
20” x 16” 3 Blade Propeller	20X163PB	All*

*** Suitable for a 1.5” Shaft**

Accessories: Lever Controller

	Description	Part No.	Model
	Single Lever Control Unit (side mounted)	RDG92010055	All
	3 Metre Cable	RDG92010056	All
	Q/R Ball Joint	RDG1792	All
	Gearbox Toggle	RDG5291	All
	Split Pin	RDG1693	All
	Cable Clamp	RDG1742	All

Dealer List

Area	Company	Telephone	Email
BERKSHIRE	Driveline Marine	0118 942 3877	tam@drivelinemarine.com
	Marcus Marine Engineering Ltd (Servicing, Repairs & Breakdowns only)	07900890911	Marcus@marcusmarine.co.uk
BRISTOL	Advance Marine	01275 815910	phil@advancemarine.co.uk
CHESHIRE	Aqueduct Marina	01270 525040	info@aqueductmarina.co.uk
	Midland Chandlers	01928 751 800	preston.brook@midlandchandlers.co.uk
	Nantwich Canal Centre Ltd	01270 625122	info@nantwichcc.com
CORNWALL	Black Dog Marine	01503 265898	blackdogmarine@googlemail.com
CUMBRIA	Windermere Aquatic Ltd	01539 442121	service@aquaticboatcentres.com
DERBYSHIRE	Midland Chandlers	01283 701445	willington@midlandchandlers.co.uk
DEVON	Sleeman & Hawken Ltd	01626 778266	sales@sleeman-hawken.co.uk
ESSEX	French Marine Motors Ltd	01206 305233 01255 850303	info@frenchmarine.com
HAMPSHIRE	Marine Power Ltd	0238 0403918	sales@marine-power.co.uk
HERTFORDSHIRE	Lee Valley Marina	01920 870499 01920 293101	stansteadmarina@vibrantpartnerships.co.uk
	Keypart Ltd	01923 276000	sales@keypart.com
LEICESTERSHIRE	Foxton Boat Services Ltd	01162 792285	foxtonboats@btinternet.com
LONDON	JSA Marine Services Ltd	01923 637995	james@jsamarineservices.com
	Lee Valley Marina	020 88061717	springfieldmarina@vibrantpartnerships.co.uk
MIDDLESEX	Lindon Lewis Marine	01932 247427	service@pushtheboatout.com
NORTHAMPTON-SHIRE	Grand Junction Boat Co.	01604 858043	info@boatrepairs.uk.com
	Midland Chandlers	01788 891401	braunston@midlandchandlers.co.uk
NOTTINGHAM	Farndon Marina	01636 705483	info@farndonmarina.co.uk
OXFORDSHIRE	Aynho Wharf	01869 338483	info@aynhowharf.co.uk
STAFFORDSHIRE	JD Boat Services Ltd	01902 791811	david@jdboats.co.uk
	Midland Chandlers	01785 712437	penkridge@midlandchandlers.co.uk
	River Canal Rescue	01785 785680	enquiries@rivercanalrescue.co.uk
	Stone Boatbuilding Company	01785 812688	stonechandlery@aol.com

	Streethay Wharf	01543 414808	office@streethaywharf.co.uk
WARWICKSHIRE	Fenny Marina Ltd	01527 876438	enquiries@craftedboats.co.uk
	Springwood Haven Leisure Ltd	0845 4566572	enquiries@springwoodhaven.co.uk
WILTSHIRE	Devizes Marina	01380 725300	sales@devizesmarina.com
WORCESTERSHIRE	ABC Leisure Group Ltd	0808 231 2848	info@abcboathire.com
	Crafted Boats Ltd	01527 876438	craftedboats@btconnect.com
	Evesham Marina	01386 768500	info@eveshammarina.co.uk
	Starline Narrowboats	01531 632003	enquiries@starlinenarrowboats.co.uk
YORKSHIRE	Rodley Boat Centre	01132 576132	rodleyboatcentre@msn.com
MONMOUTHSHIRE	Castle Narrowboats	01873 830001	info@castle.narrowboats.co.uk
EIRE	Southshore Marina & Diesel Ltd	028383 41010	info@southshoremarine.co.uk

Manuals & Brochures

Complete Owner's Manual	RDG603B5	Can be found online at: www.barrus.co.uk/divisions/marine/diesel/shire/downloads/shire-manuals/
Latest Brochure	N/A	Can be found online at: www.barrus.co.uk/divisions/marine/diesel/shire/downloads/shire-brochure/