ORIGINAL PARTS BOOK

SHIRE PARTS BOOK

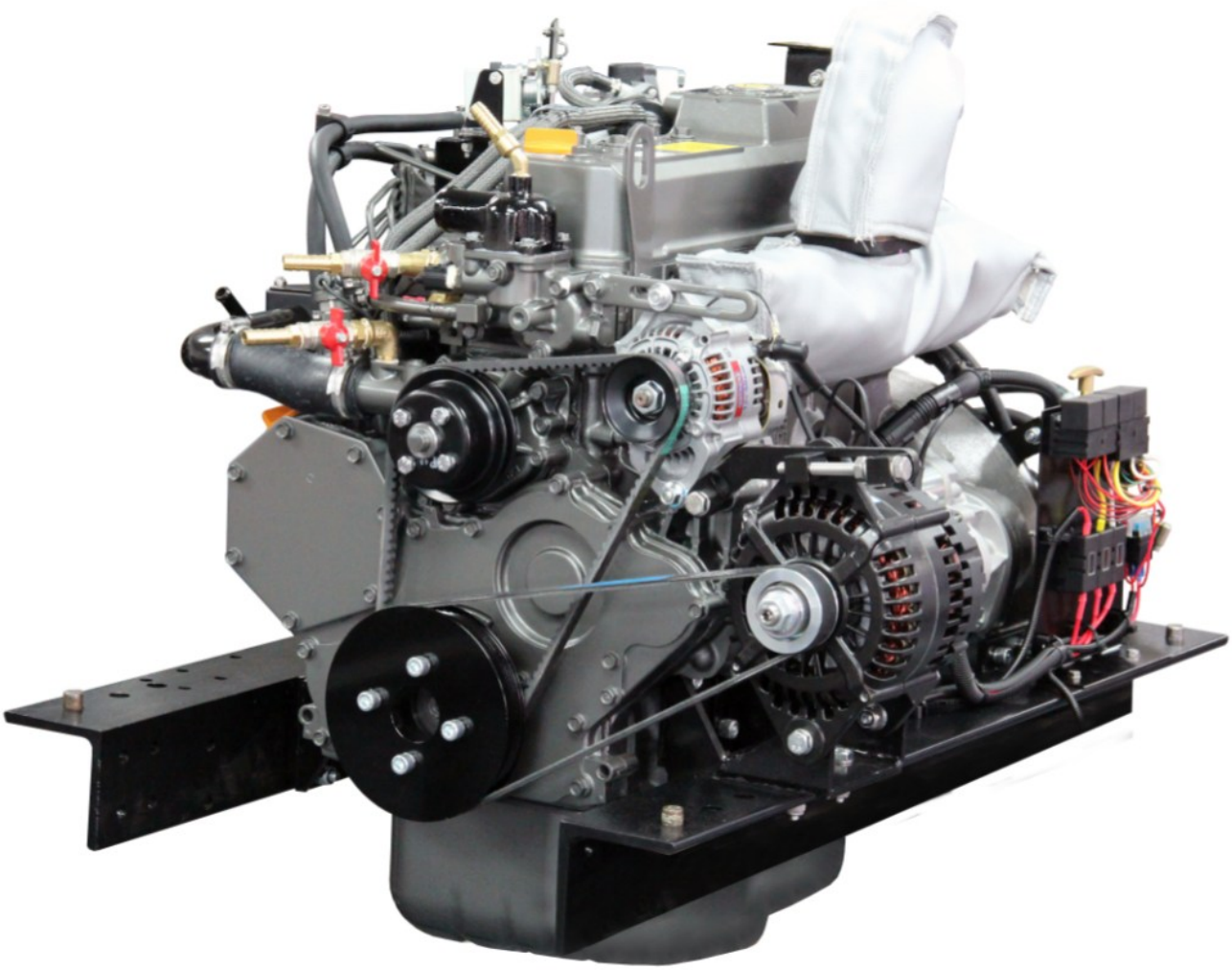

For the following engine models*:

Shire 09 70
Shire 11 70
Shire 12 70
Shire 14 70
Shire 70

*Standard Model, there may be a number of optional extras, or alternative components, that may be fitted to an engine that are not shown in this book.

RDG603A42 - Issue 13 - Issued 06/05/2025

Index

Page

Base Engine Model 3
Service Parts 4
Belts 4
Fuel Filter Head 5
Consumables 5
Control Panel Parts 6
Electrical Parts 8
Gearbox Parts 10
Pumps 11
Thermostat Parts 12
Header Tank Parts 13
'E' Kit Parts 13
Engine Mount Parts 14
Exhaust Manifold Blankets 14
Engine Parts: Injectors 15
Engine Parts: Fuel Injection Pump 16
Engine Parts: Rocker Cover Gasket & Oil Cap 17
Engine Parts: Cylinder Head Gasket 18
Accessories: Exhaust Equipment 19
Accessories: Sterngear 20
Accessories: Couplings 20
Accessories: Propellers 21
Accessories: Lever Controller 22
Dealer List 23
Manuals & Brochures 24

Base Engine Model

Shire Model	Base Engine
Shire 09 70	4TNV98-NSA
Shire 11 70	4TNV98-NSA
Shire 12 70	4TNV98-NSA
Shire 14 70	4TNV98-NSA
Shire 70	4TNV98-ZNSA

On the E.P Barrus Website there is a Shire 70 Parts Book which has a more extensive list of parts available for your engine. To access the Shire Parts Books on the internet, type the following short link into your search engine:

https://www.barrus.co.uk/divisions/marine/diesel/shire/downloads/shire-parts/?p=1

For the Shire Shop, visit:

https://shireshop.co.uk/

Service Parts

	Description	Part No.	Model
	Primary Fuel Filter	RDG9188346	All
	Fuel Filter Drain Screw (black rubber washer supplied with filter)	RDG9189022	All
	Secondary Fuel Filter	119802-55810	All
	Air Filter Element	RDG6613	All
	Oil Filter	129150-35170	All

Belts

	50A Alternator Belt	GB/T12732-1996	All
	240A Alternator Belt	RDG0047511	All

Fuel Filter Head

Description	Part No.	Model
Secondary Fuel Filter Head	129004-55612-9	All

Consumables

Description	Part No.	Model
Engine Oil 10W40 CD 5L Container (This can also be used for a PRM 150 and PRM 280 Gearbox) NOTE: This part number supersedes RDG2797	RDG6110	All
Diesel Fuel Additive 500ml Container	RDG80210219	All

Control Panel Parts

*** The Shire 09 70 and Shire 11 70 used a VDO panel which is no longer available. If the Control Panel or any of the parts on it require replacement the newer Standard/Deluxe Control Panel would be required.**

	Description	Part No.	Model
	Standard Control Panel	RDG20710110	Optional*
	Deluxe Control Panel	RDG20710111	Standard*
	Ignition Switch	RDG215A5	All
	Ignition Key (for switch RDG215A5)	RDG215A196	All
	Ignition Switch Kit (to replace ignition switches fitted before 2016)	RDG215A6 (SS1626)	All
	Tacho Gauge	RDG20710158	All (Panels as listed above)
	Oil Pressure Gauge	RDG21710160	All (Panels as listed above)
	Voltmeter Gauge	RDG21710161	All (Panels as listed above)

	Water Temperature Gauge	RDG21710159	All (Panels as listed above)
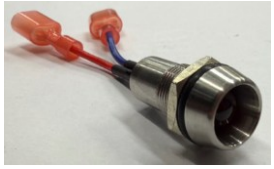	Control Panel Warning Light	RDG20910163	All (Panels as listed above)
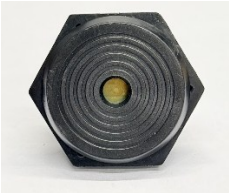	Buzzer	RDG21610164	All
	Panel Relay	RDG21410167	All
	Resistor 68 Ohm	RDG22010171 RDG220A1	All
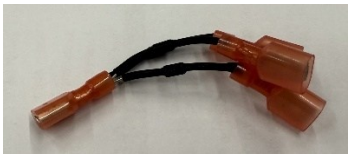	Diode Pack	RDG22310165	All
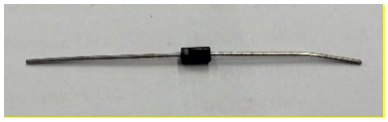	Single Diode	RDG22310166	All

Electrical Parts

	Description	Part No.	Model
	Extension Loom (2.3m)	RDG4041	All
	50A Alternator	AND0286	All
	150A Alternator (160A Alternator originally supplied but is no longer available)	RDG20110201	Shire 09 70 (Option on some later models)
	240A Alternator	RDG2019682	Shire 11 70 Shire 12 70 Shire 14 70 Shire 70
	120A 24V Alternator (Optional leisure alternator)	RDG201A11	All (Optional extra)
	Plug for 24V Alternator	RDG210A6	All
	Starter Motor	RDG208A12	All
	Electric Fuel Pump	RDG504A90	All

	Water Temperature Switch	121250-44901	Shire 09 70 Shire 11 70 Shire 12 70 Shire 14 70
	Water Temperature Sender	RDG6765	Shire 09 70 Shire 11 70 Shire 12 70 Shire 14 70
	Water Temperature Switch / Sensor	RDG2189446	Shire 70
	Oil Pressure Sensor	RDG6752	Shire 06 65 (Shire 70)
	Yanmar Oil Pressure Switch	114250-39450	Shire 70
	Oil Pressure Switch Sensor	RDG2189445	All
	Engine Stop Control System and Glow Plug Fuse (40 Amp)	RDG3246	Shire 09 70 Shire 11 70 Shire 12 70 Shire 14 70
	Control Panel Supply and Engine Start Control System Fuse (15 Amp)	RDG3245	Shire 09 70 Shire 11 70 Shire 12 70 Shire 14 70
	Main Permanent Live Fuse (10 Amp)	RDG1437	Shire 70

	Starter Relay	RDG1396	All
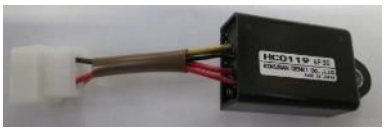	Timer	129211-77920	All

* If applicable

Gearbox Parts

	Description	Part No.	Model
	Damper Drive Plate for PRM 260 D2 / D3	RDG6235 - No longer available (Use RDG5002)	Shire 09 70
	Damper Drive Plate for PRM 260 D2 / D3, 280 D2 / D3	RDG5002	Shire 11 70 Shire 12 70 Shire 14 70 Shire 70
	PRM 280 D2 / D3 Gearbox (This replaces the PRM 260 D2 Gearbox fitted on Shire 09 70, Shire 11 70, Shire 12 70, Shire 14 70)	RDG914A25 (D2) RDG914A220 (D3)	All
	Gearbox Oil Cooler	RDG9097231	Shire 09 11 Shire 11 70 Shire 12 70

	Gearbox Oil Cooler	RDG909A15	Shire 14 Shire 70
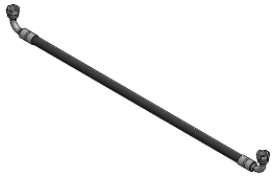	Gearbox Oil Cooler Hose (Long)	RDG3017340	All
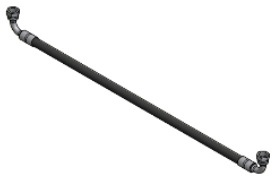	Gearbox Oil Cooler Hose (Short)	RDG3017339	All
	Gearbox Oil Cooler Hose (Long) for PRM 280	RDG5690	All
	Gearbox Oil Cooler Hose (Short) for PRM 280	RDG5295	All

Pumps

	Description	Part No.	Model
	Sump Pump	RDG1461	All
	Gearbox Pump	RDG2837	All

Thermostat Parts

	Description	Part No.	Model
	Thermostat (71°) (Fitted to twin thermostat engines)	1211850-49810	Shire 09 11 Shire 11 70 Shire 12 70 Shire 14 70
	Thermostat (82°) (Fitted to engine) (For upgrade use RDG909A7)	121850-49801	Shire 70
	Thermostat (86°) (Fitted to single thermostat engines)	RDG909A7	Shire 70
	Thermostat (88°) (Fitted to twin thermostat engines)	L375-06203-2	Shire 09 11 Shire 11 70 Shire 12 70 Shire 14 70
	Thermostat Gasket (Fitted to twin thermostat - on Shire 70 fitted to engine)	KM385T-06209	All
	Thermostat Gasket (Fitted to twin thermostat - on Shire 70 fitted to engine)	L375-06202	All

Header Tank Parts

	Description	Part No.	Model
	Header Tank	RDG6364	All
	Header Tank Cap	RDG1723	All
	Header Tank Hose	RDG3310	All

‘E’ Kit Parts

	Description	Part No.	Model
	3.5kW ‘E’ Kit Alternator Belt	RDG0047600	Shire 09 11 Shire 11 70 Shire 12 70 Shire 14 70 Shire 70
	5kW ‘E’ Kit Alternator Belt	RDG0047600	Shire 14 70 Shire 70

Engine Mount Parts

	Description	Part No.	Model
	Engine Mount	RDG3033	All
	Engine Mount Stud Kit (for RDG3033)	RDG1867	All

Exhaust Manifold Blankets

	Description	Part No.	Model
	Exhaust Blanket	RDG9047320	Shire 09 70 Shire 11 70 Shire 12 70 Shire 14 70
	Exhaust Pipe Blanket	RDG904A48	Shire 70
	Exhaust Elbow Blanket	RDG904A47	Shire 70
	Exhaust Blanket	RDG904A46	Shire 70

Engine Parts: Injectors

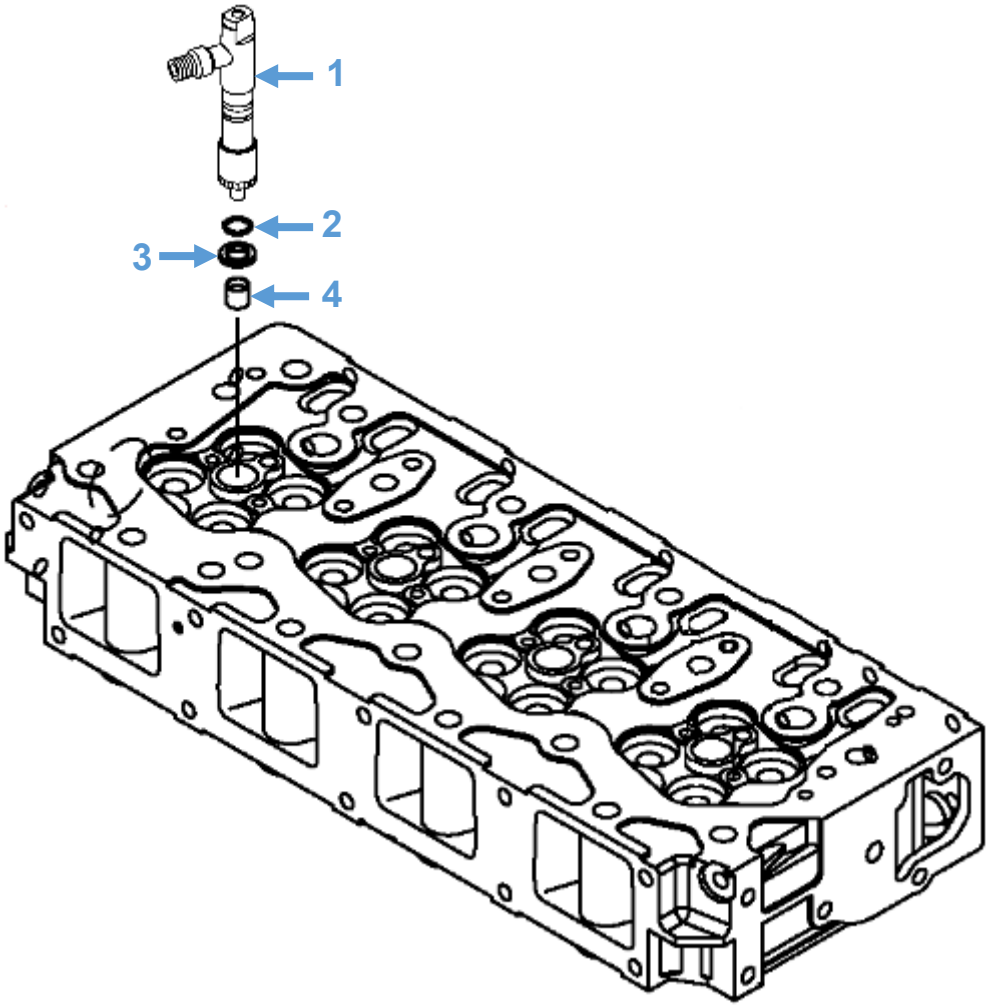

1	Injector	729907-53100	Shire 09 70 Shire 11 70 Shire 12 70 Shire 14 70
		729927-53100	Shire 70
2	Injector O-Ring	24311-000120	All
3	Injector Seat	119625-11880	All
4	Injector Protector	119802-11870	All

Engine Parts: Fuel Injection Pump

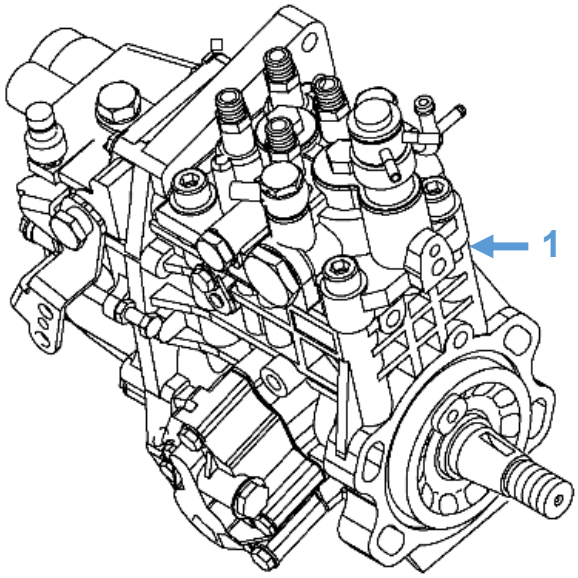

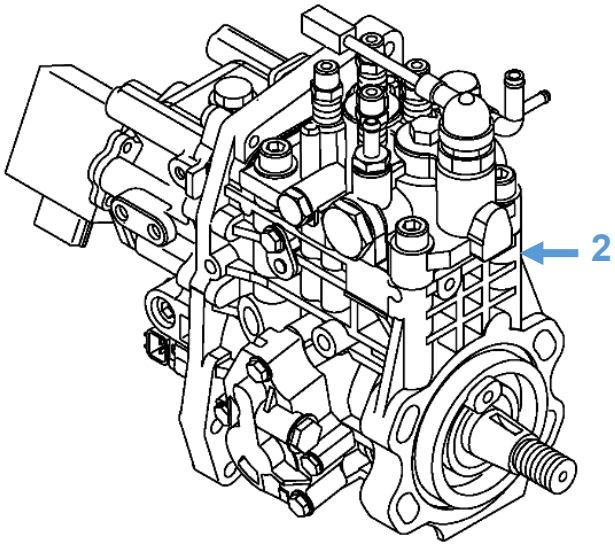

Diagram No.	Description	Part No.	Model
1	Fuel Injection Pump	729907-51320	Shire 09 70 Shire 11 70 Shire 12 70 Shire 14 70
2	Fuel Injection Pump	729939-51390	Shire 70

Engine Parts: Rocker Cover Gasket & Oil Cap

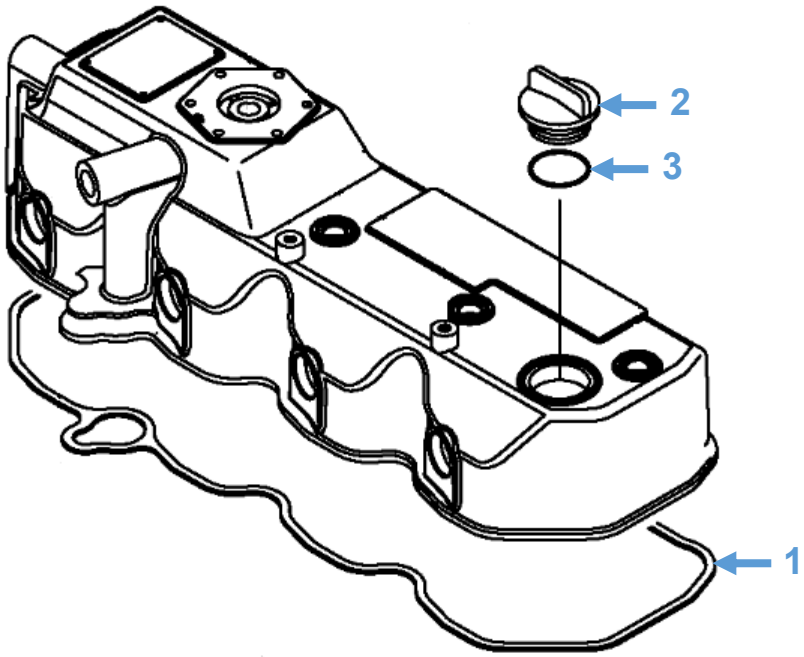

Diagram No.	Description	Part No.	Model
1	Rocker Cover Gasket	129907-11310	Shire 09 70 Shire 11 70 Shire 12 70 Shire 14 70
		129933-11310	Shire 70
2	Oil Cap	124160-01751	All
3	Oil Cap O-Ring	24311-000320	All

Engine Parts: Cylinder Head Gasket

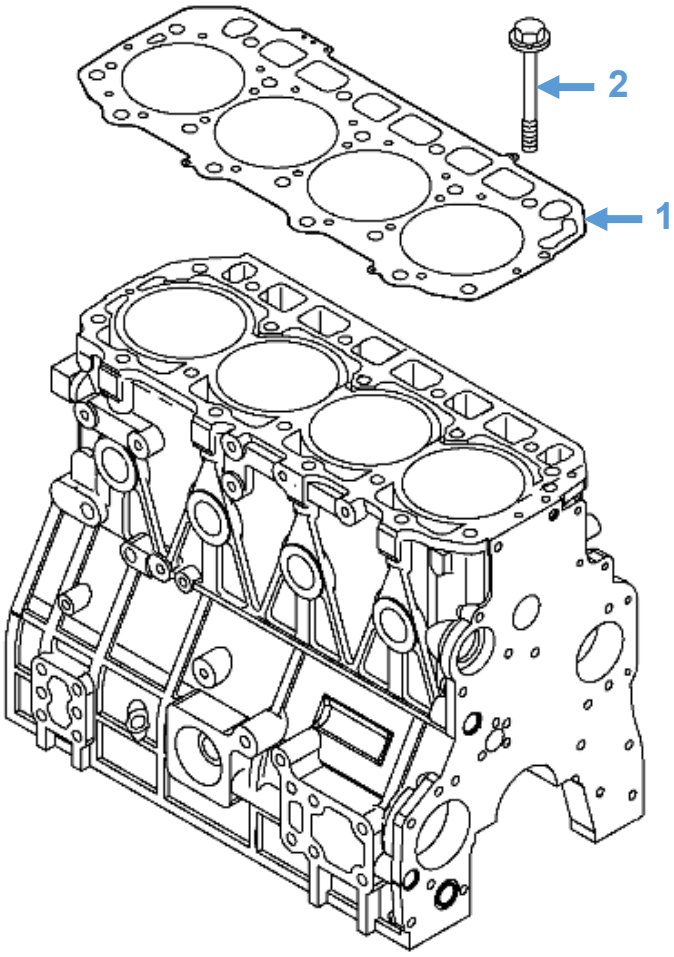

Diagram No.	Description	Part No.	Model
1	Cylinder Head Gasket	129907-01331	All
2	Cylinder Head Bolt	129900-01200	All

Accessories: Exhaust Equipment

	Description	Part No.	Model
	Flexible Exhaust Pipe Blanket	RDG2477	All
	Exhaust Coupling 2”	RDG9048003	All
	Flexible Exhaust Pipe 2”	RDG9048004	All
	Dry Exhaust Silencer 2”	RDG9048005	All
	Hospital Silencer 2”	RDG9048364	All
	2" Equal Elbow BSP	RDG9048002	All
	Exhaust Gasket	129930-13201	All

Accessories: Sterngear

	Description	Part No.	Model
	30” x 1.5” Diameter Propeller Shaft (12:1 Taper)	EPB3841	All
	35” x 1.5” Diameter Propeller Shaft	EPB5615	All
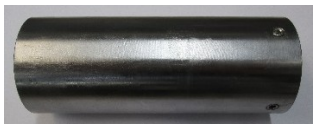	Weldable Sterntube	EPB5534	All
	Flexible Shaft Seal (to suit 1.5” shaft)	EPB5536	All

Accessories: Couplings

	Description	Part No.	Model
	R&D Flexible Coupling Disc 5” Flange PRM 260 / 280	RDG9126579	All
	R&D Split Boss Clamp Coupling 5” Flange PRM 260 / 280	RDG9129923	All
	Centaflex Type 16 Coupling 1.5”	RDG2779	All

Accessories: Propellers

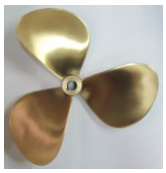

Description	Part No.	Model
20” x 14” 3 Blade Propeller	20X143PB	All*

*** Suitable for a 1.5” Shaft, 12:1 Taper**

Accessories: Lever Controller

	Description	Part No.	Model
	Single Lever Control Unit (side mounted)	RDG92010055	All
	3 Metre Cable	RDG92010056	All
	Q/R Ball Joint	RDG1792	All
	Gearbox Toggle	RDG5291	All
	Split Pin	RDG1693	All
	Cable Clamp	RDG1742	All

Dealer List

Area	Company	Telephone	Email
BERKSHIRE	Driveline Marine	0118 942 3877	tam@drivelinemarine.com
	Marcus Marine Engineering Ltd (Servicing, Repairs & Breakdowns only)	07900890911	Marcus@marcusmarine.co.uk
BRISTOL	Advance Marine	01275 815910	phil@advancemarine.co.uk
CHESHIRE	Aqueduct Marina	01270 525040	info@aqueductmarina.co.uk
	Midland Chandlers	01928 751 800	preston.brook@midlandchandlers.co.uk
	Nantwich Canal Centre Ltd	01270 625122	info@nantwichcc.com
CORNWALL	Black Dog Marine	01503 265898	blackdogmarine@googlemail.com
CUMBRIA	Windermere Aquatic Ltd	01539 442121	service@aquaticboatcentres.com
DERBYSHIRE	Midland Chandlers	01283 701445	willington@midlandchandlers.co.uk
DEVON	Sleeman & Hawken Ltd	01626 778266	sales@sleeman-hawken.co.uk
ESSEX	French Marine Motors Ltd	01206 305233 01255 850303	info@frenchmarine.com
HAMPSHIRE	Marine Power Ltd	0238 0403918	sales@marine-power.co.uk
HERTFORDSHIRE	Lee Valley Marina	01920 870499 01920 293101	stansteadmarina@vibrantpartnerships.co.uk
	Keypart Ltd	01923 276000	sales@keypart.com
LEICESTERSHIRE	Foxton Boat Services Ltd	01162 792285	foxtonboats@btinternet.com
LONDON	JSA Marine Services Ltd	01923 637995	james@jsamarineservices.com
	Lee Valley Marina	020 88061717	springfieldmarina@vibrantpartnerships.co.uk
MIDDLESEX	Lindon Lewis Marine	01932 247427	service@pushtheboatout.com
NORTHAMPTON-SHIRE	Grand Junction Boat Co.	01604 858043	info@boatrepairs.uk.com
	Midland Chandlers	01788 891401	braunston@midlandchandlers.co.uk
NOTTINGHAM	Farndon Marina	01636 705483	info@farndonmarina.co.uk
OXFORDSHIRE	Aynho Wharf	01869 338483	info@aynhowharf.co.uk
STAFFORDSHIRE	JD Boat Services Ltd	01902 791811	david@jdboats.co.uk
	Midland Chandlers	01785 712437	penkridge@midlandchandlers.co.uk
	River Canal Rescue	01785 785680	enquiries@rivercanalrescue.co.uk
	Stone Boatbuilding Company	01785 812688	stonechandlery@aol.com

	Streethay Wharf	01543 414808	office@streethaywharf.co.uk
WARWICKSHIRE	Fenny Marina Ltd	01527 876438	enquiries@craftedboats.co.uk
	Springwood Haven Leisure Ltd	0845 4566572	enquiries@springwoodhaven.co.uk
WILTSHIRE	Devizes Marina	01380 725300	sales@devizesmarina.com
WORCESTERSHIRE	ABC Leisure Group Ltd	0808 231 2848	info@abcboathire.com
	Crafted Boats Ltd	01527 876438	craftedboats@btconnect.com
	Evesham Marina	01386 768500	info@eveshammarina.co.uk
	Starline Narrowboats	01531 632003	enquiries@starlinenarrowboats.co.uk
YORKSHIRE	Rodley Boat Centre	01132 576132	rodleyboatcentre@msn.com
MONMOUTHSHIRE	Castle Narrowboats	01873 830001	info@castle.narrowboats.co.uk
EIRE	Southshore Marina & Diesel Ltd	028383 41010	info@southshoremarine.co.uk

Manuals & Brochures

Complete Owner's Manual	RDG603B5	Can be found online at: www.barrus.co.uk/divisions/marine/diesel/shire/downloads/shire-manuals/
Latest Brochure	N/A	Can be found online at: www.barrus.co.uk/divisions/marine/diesel/shire/downloads/shire-brochure/