ORIGINAL PARTS BOOK

SHIRE PARTS BOOK

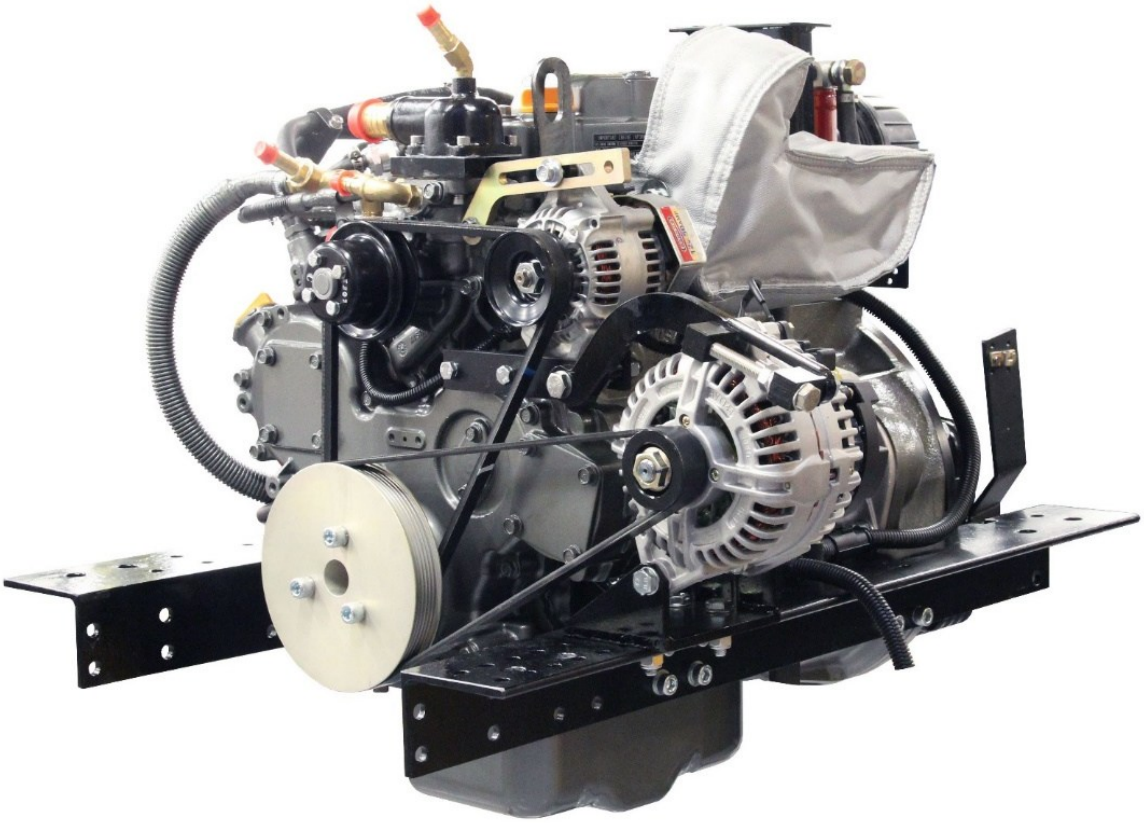

For the following engine models*:

Shire 05 35
Shire 06 35
Shire 11 35
Shire 12 30/35
Shire 14 30/35
Shire 30/35

*Standard Model, there may be a number of extras, or alternative components, that that may be fitted to an engine that are not shown in this book.

RDG603B37 - Issue 1 – Issued 18/06/2025

Index

Page

Base Engine Model 3
Service Parts 4
Belts 5
Fuel Filter Head 6
Consumables 7
Control Panel Parts 8
Electrical Parts 10
Alternator Upgrade Kits for Older Engines 13
Gearbox Parts 14
Pumps 15
Thermostat Parts 16
Header Tank Parts 17
'E' Kit Parts 17
Engine Mount Parts 18
Exhaust Manifold Blankets 18
Engine Parts: Injectors 19
Engine Parts: Fuel Injection Pump 20
Engine Parts: Glow Plugs 19
Engine Parts: Rocker Cover Gasket & Oil Cap 21
Engine Parts: Cylinder Head Gasket 22
Accessories: Exhaust Equipment 23
Accessories: Sterngear 24
Accessories: Couplings 24
Accessories: Propellers 25
Accessories: Lever Controller 26
Dealer List 27
Manuals & Brochures 28

Base Engine Model

Shire Model	Base Engine
Shire 05 35	3TNV82A-DSA
Shire 06 35	3TNV82A-DSA
Shire 11 35	3TNV82A-DSA
Shire 12 30/35	3TNV82A-BDSA
Shire 14 30/35	3TNV82A-BDSA
Shire 30/35	3TNV82A-BDYED-SH

On the E.P Barrus Website there is a Shire 30 Parts Book and Shire 35 Parts Book which has a more extensive list of parts available for your engine. To access the Shire Parts Books on the internet, type the following short link into your search engine:

https://www.barrus.co.uk/divisions/marine/diesel/shire/downloads/shire-parts/?p=1

For the Shire Shop, visit:

https://shireshop.co.uk/

Service Parts

	Description	Part No.	Model
	Primary Fuel Filter	RDG2238	Shire 05 35 Shire 06 35 Shire 11 35
	Primary Fuel Filter*	RDG9188346	Shire 12 30/35 Shire 14 30/35 Shire 30/35
	Fuel Filter Drain Screw (black rubber washer supplied with filter)	RDG9189022	Shire 09 35 Shire 11 35 Shire 12 30/35 Shire 14 30/35 Shire 30/35
	Secondary Fuel Filter*	119802-55810	All
	Air Filter Element	RDG5795	All (up to Serial No xx-02662)
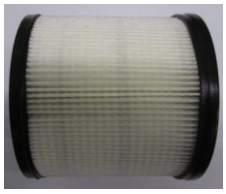	Air Filter Element	RDG919A19	Shire 30/35 (from Serial No xx-02663)
	Oil Filter*	129150-35170	All

*** Only Filters which meet the Recreational Craft Directive should be fitted to your engine.**

Belts

	50A Alternator Belt	RDG6079	Shire 05 35 Shire 06 35 Shire 11 35
	50A Alternator Belt	25132-003700E	Shire 12 30/35 Shire 14 30/35 Shire 30/35
	110A Alternator Belt	RDG5757	Shire 05 35 Shire 06 35 Shire 11 35 (Serial No 000001 to 061081)
	110A Alternator Belt	RDG2254	Shire 06 35 Shire 11 35 (Serial No 061082 onwards)
	125A Alternator Belt	RDG0047511	Shire 30/35 (from Serial No xx-02663)
	140A Alternator Belt	RDG6076	Shire 12 35 Shire 14 35
	150A Alternator Belt	RDG6076	Shire 35 (up to Serial No xx-02662)
	240A Alternator Belt	RDG0047498	Shire 35

Fuel Filter Head

Description	Part No.	Model
Secondary Fuel Filter Head	129004-55612-9	All

Consumables

	Description	Part No.	Model
	Engine Oil 10W40 CD 5L Container (This can also be used for a PRM 150 Gearbox) NOTE: This part number supersedes RDG2797	RDG6110	All
	ATF Oil for PRM 80/90/120/125	ATF-1L	All
	Diesel Fuel Additive 500ml Container	RDG80210219	All

Control Panel Parts

*** The Shire 11 35 and earlier models used a VDO panel which is no longer available. If the Control Panel or any of the parts on it require replacement the newer Standard/Deluxe Control Panel is required.**

	Description	Part No.	Model
	Basic Control Panel – Single Alternator Engines	RDG207A16	All Shire 30
	Standard Control Panel	RDG20710110	All*
	Deluxe Control Panel	RDG20710111	All*
	Ignition Switch Assy	RDG215A5	All
	Ignition Key (for switch RDG215A5)	RDG215A196	All
	Ignition Switch Kit (to replace ignition switches fitted before 2016)	RDG215A6 (SS1626)	All
	Tacho Gauge	RDG20710158	All
	Oil Pressure Gauge	RDG21710160	All

	Voltmeter Gauge	RDG21710161	All
	Water Temperature Gauge	RDG21710159	All
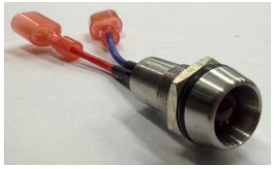	Control Panel Warning Light	RDG20910163	All
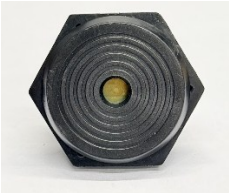	Buzzer	RDG21610164	All
	Panel Relay	RDG21410167	All
	Resistor 68 Ohm	RDG22010171 RDG220A1	All
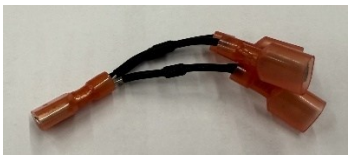	Diode Pack	RDG22310165	All
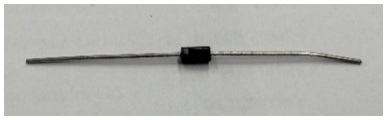	Single Diode	RDG22310166	All

Electrical Parts

	Description	Part No.	Model
	Extension Loom (2.3m)	RDG4041	All
	50A Alternator	AND0286	All
	70A Alternator	RDG5682	All Shire 30 Shire 05 35 Shire 06 35
	125A Alternator	128990-77250	Shire 30/35 (from Serial No xx-02663)
	150A Alternator (110A / 140A Alternators originally supplied are no longer available)	RDG20110201	All (up to Serial No xx-02662)
	240A Alternator	RDG2019682	Shire 35
	120A 24V Alternator (Optional leisure alternator)	RDG201A11	All (Optional extra)
	Plug for 24V Alternator	RDG210A6	All

	Starter Motor	SHI0081	All
	Stop Solenoid	119653-77950	All
	Electric Fuel Pump	RDG504A90	All Shire 30 Shire 11 35 Shire 12 35 Shire 14 35 Shire 35
	Water Temperature Switch	121250-44901	All
	Water Temperature Sender (only if Deluxe Panel is fitted)	RDG6765	All
	Water Temperature Sender and Switch (only if Deluxe Panel is fitted)	RDG2189446	All
	Yanmar Oil Pressure Switch	114250-39450	All
	Oil Pressure Switch / Sensor (only if Deluxe Panel is fitted)	RDG2189445	All
	Engine Stop Control System and Glow Plug Fuse (40 Amp)	RDG3246	All

	Control Panel Supply and Engine Start Control System Fuse (15 Amp)	RDG3245	All
	Starter Relay	RDG1396	All
	Cold Start Relay	RDG5279	Shire 14 35* Shire 30/35
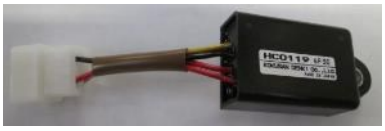	Timer	129211-77920	All
	Glow Plug Relay	119650-77911	All

* If applicable

Alternator Upgrade Kits for Older Engines

	170A Alternator Kit	RDG702B58	Shire 1600, 2000, 2200
	170A Alternator Upgrade Kit C/W Crankshaft Pulley (110A 12V Alternator no longer available from Prestolite)	RDG702B60	Shire models with 110A Alternators originally fitted
	170A Alternator Upgrade Kit No Crankshaft Pulley (110A 12V Alternator no longer available from Prestolite)	RDG702B61	Shire models with 110A Alternators originally fitted

Gearbox Parts

	Description	Part No.	Model
	Damper Plate for PRM 80 D2 / PRM 90 D2 / PRM 120 D2	RDG2493	All Shire 30
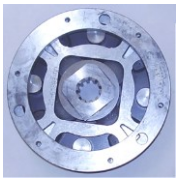	Damper Plate for PRM 150 D2 (No longer available, use RDG1766)	RDG6231	Shire 06 35 Shire 11 35
	Damper Plate for PRM 150 D2 / D3	RDG1766	Shire 05 35 Shire 12 35 Shire 14 35 Shire 35
	PRM 90 D2 Gearbox (this replaces the PRM 80 D2 / PRM 120 D2 Gearbox which may be fitted)	RDG914A196	All Shire 30
	PRM 150 D2 Gearbox (Unless the optional D3 3:1 Ratio gearbox has been fitted)	RDG1765 (RDG1959)	All
	Gearbox Oil Cooler (This replaces most previous oil coolers fitted on to engines**)	RDG909A19	All except engines with mechanical gearboxes*
	Gearbox Oil Cooler Hose (Long) for PRM 150 / 280	RDG5690	All except engines with mechanical gearboxes
	Gearbox Oil Cooler Hose (Short) for PRM 150 / 280	RDG5295	All except engines with mechanical gearboxes
	Gearbox Oil Cooler Water Hose 28mm x 28mm ID	RDG1883	Shire 11 35 Shire 12 35 Shire 14 35 Shire 35

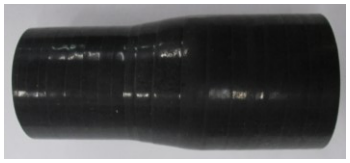	Gearbox Oil Cooler Water Hose Reducer 35-28mm	RDG3018381	All
	MA100A Gearbox (No longer available)	Enquire as to gearbox or drive coupling details	Shire 11 35

*** Modifications may be required for the Oil Cooler to fit which include using RDG3018381 (Gearbox Oil Cooler Water Hose Reducers 35-28mm).**
****Engines fitted with Hangzhou Advance MA100 or MA125 require an alternative High Pressure Oil Cooler:**
RDG9098962 with 28/34mm water hose connections
RDG9099240 with 34/34mm water hose connections

Pumps

	Description	Part No.	Model
	Sump Pump ¾”	RDG2837	All

Thermostat Parts

	Description	Part No.	Model
	Thermostat (71°)	129155-49801	Early Twin Thermostat engines only
	Thermostat (82°) (For upgrade use RDG909A7)	129457-49801	All
	Thermostat (86°)	RDG909A7	All
	Thermostat Gasket	129795-49551	Shire 05 35 Shire 06 35 Shire 11 35
	Thermostat Gasket	129350-49541	Shire 12 30/35 Shire 14 30/35 Shire 30/35

Header Tank Parts

*** The Shire 05 35 used a different type of Header Tank which is no longer available. If the Header Tank or any of the parts which fit on it require replacement the newer Header Tank is required.**

	Description	Part No.	Model
	Header Tank	RDG6364	All*
	Header Tank Cap	RDG1723	All
	Header Tank Hose	RDG3310	All

‘E’ Kit Parts

	Description	Part No.	Model
	3.5kW ‘E’ Kit Alternator Belt	RDG6076	Shire 06 35 Shire 11 35
	3.5kW ‘E’ Kit Alternator Belt	RDG0047511	Shire 12 30/35 Shire 14 30/35 Shire 30/35
	5kW ‘E’ Kit Alternator Belt	RDG6076	Shire 06 35 Shire 11 35
	5kW ‘E’ Kit Alternator Belt	RDG0047511	Shire 12 30/35 Shire 14 30/35 Shire 30/35

Engine Mount Parts

	Description	Part No.	Model
	Engine Anti-Vibration Mount	RDG3033	Shire 12 30/35 Shire 14 30/35 Shire 30/35
	Engine Mount Stud Kit (for RDG3033)	RDG1867	Shire 12 30/35 Shire 14 30/35 Shire 30/35
	Front Engine Mount & Height Adjuster Kit	RDG5833	All

Exhaust Manifold Blankets

	Description	Part No.	Model
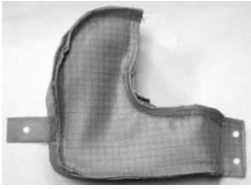	Exhaust Blanket	RDG2478	All

Engine Parts: Injectors

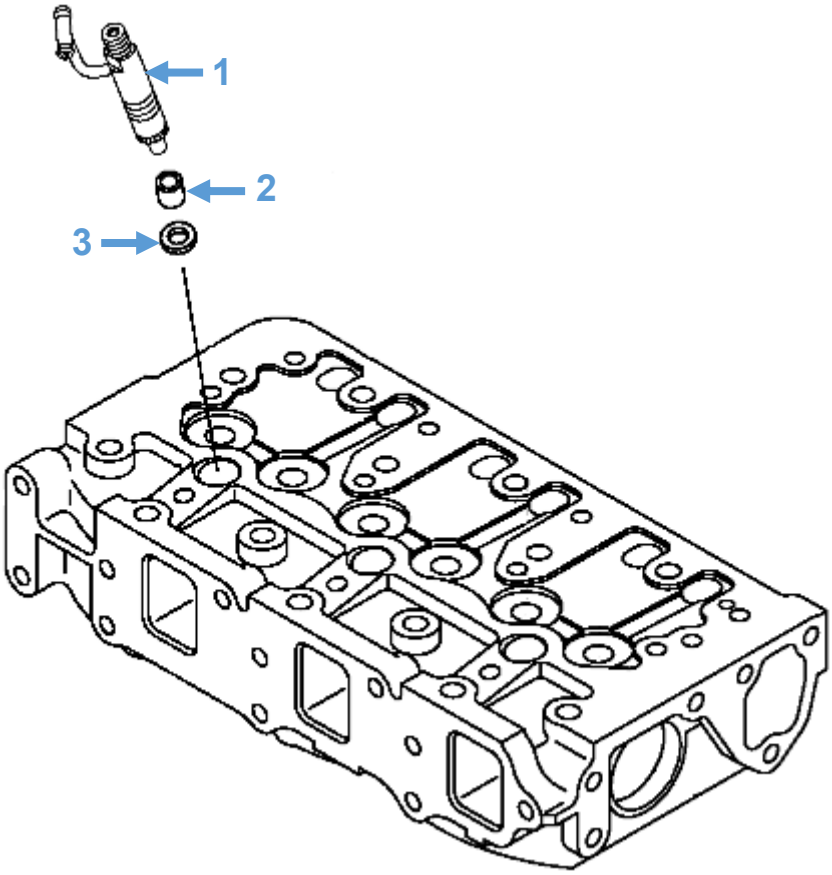

Diagram No.	Description	Part No.	Model
1	Injector	719802-53101	Shire 05 35 Shire 06 35 Shire 11 35
		729008-53100	Shire 12 30/35 Shire 14 30/35 Shire 30/35
2	Injector Protector	119802-11870	All
3	Injector Seat	119625-11880	All

Engine Parts: Glow Plugs

	Glow Plug	129008-77810	Later Shire engines (Check visually)

Engine Parts: Fuel Injection Pump

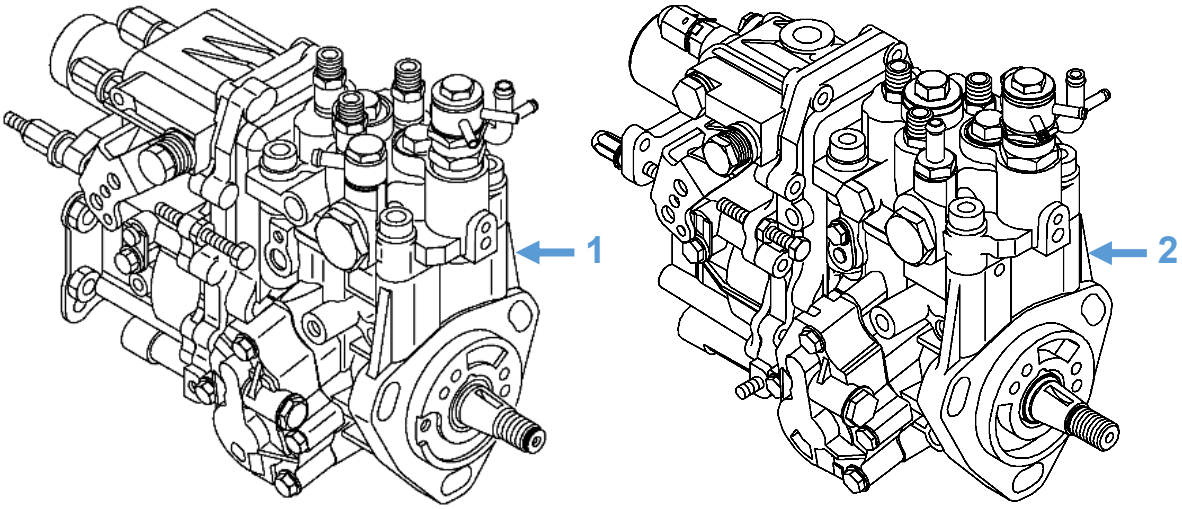

Diagram No.	Description	Part No.	Model
1	Fuel Injection Pump	719802-51310	Shire 05 35 Shire 06 35 Shire 11 35
2	Fuel Injection Pump	719933-51301	Shire 12 30/35 Shire 14 30/35 Shire 30/35

Engine Parts: Rocker Cover Gasket & Oil Cap

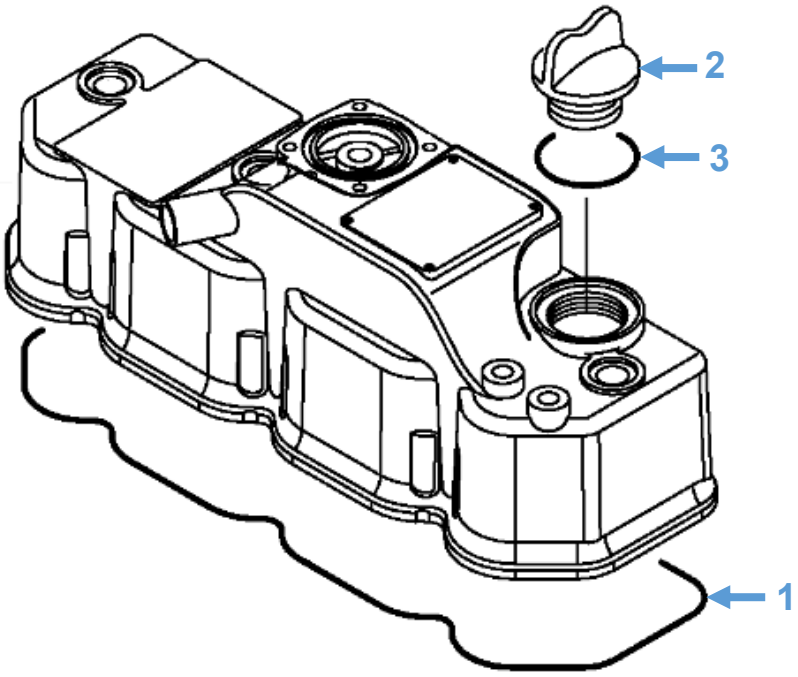

Diagram No.	Description	Part No.	Model
1	Rocker Cover Gasket	119802-11310	All
2	Oil Cap	124160-01751	All
3	Oil Cap O-Ring	24311-000320	All

Engine Parts: Cylinder Head Gasket

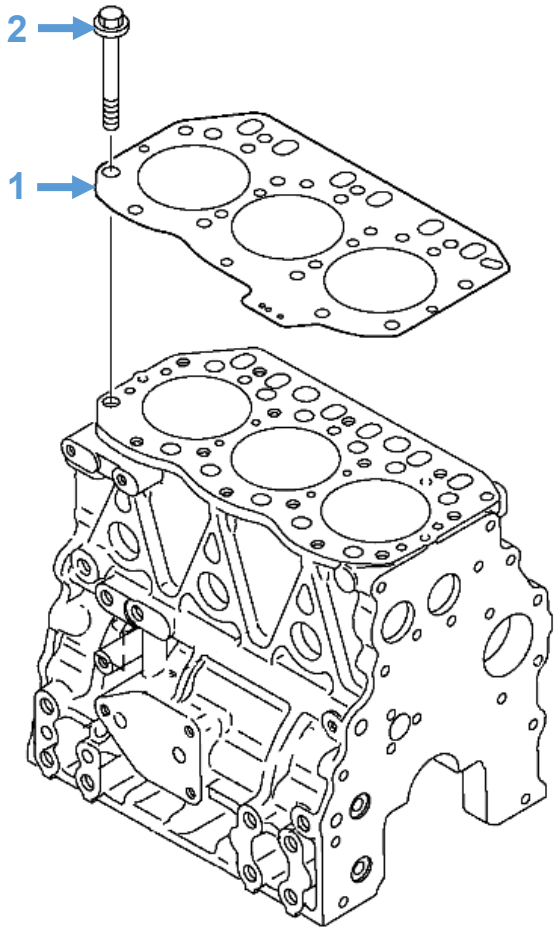

Diagram No.	Description	Part No.	Model
1	Cylinder Head Gasket	119812-01330	All
2	Cylinder Head Bolt	119810-01200	All

Accessories: Exhaust Equipment

	Description	Part No.	Model
	Exhaust Coupling 1.5”	RDG1916	All
	Flexible Exhaust Pipe Blanket	RDG2477	All
	Flexible Exhaust 1.5”	RDG1879	All
	Dry Exhaust Silencer 1.5”	RDG1911	All
	Hospital Silencer 1.5”	RDG6536	All
	1 ½” F x 1 ½” F BSP 90 Elbow	RDG5898	All

Accessories: Sterngear

	Description	Part No.	Model
	30” x 1.5” Diameter Propeller Shaft (12:1 Taper	EPB3841	All
	35” x 1.5” Diameter Propeller Shaft	EPB5615	All
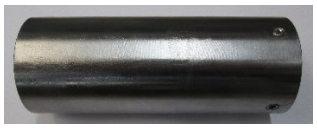	Weldable Sterntube	EPB5534	All
	Flexible Shaft Seal (to suit 1.5” shaft)	EPB5536	All

Accessories: Couplings

	Description	Part No.	Model
	R&D Flexible Coupling Disc	RDG9129347	All
	R&D Split Boss Clamp Coupling (for 1½” propeller shaft)	RDG1079349	All
	Centaflex Type 16 Coupling 1.5”	RDG2779	All

Accessories: Propellers

Description	Part No.	Model
16” x 9” 3 Blade Propeller	16X93PB	All*

***Suitable for a 1.5” Shaft, 12:1 Taper**

Accessories: Lever Controller

	Description	Part No.	Model
	Single Lever Control Unit (side mounted)	RDG92010055	All
	3 Metre Cable	RDG92010056	All
	Q/R Ball Joint	RDG1792	All
	Gearbox Toggle	RDG5291	All
	Split Pin	RDG1693	All
	Cable Clamp	RDG1742	All

Dealer List

Area	Company	Telephone	Email
BERKSHIRE	Driveline Marine	0118 942 3877	tam@drivelinemarine.com
	Marcus Marine Engineering Ltd (Servicing, Repairs & Breakdowns only)	07900 890911	Marcus@marcusmarine.co.uk
BRISTOL	Advance Marine	01275 815910	phil@advancemarine.co.uk
CHESHIRE	Aqueduct Marina	01270 525040	info@aqueductmarina.co.uk
	Midland Chandlers	01928 751 800	preston.brook@midlandchandlers.co.uk
	Nantwich Canal Centre Ltd	01270 625122	info@nantwichcc.com
CORNWALL	Black Dog Marine	01503 265898	blackdogmarine@googlemail.com
CUMBRIA	Windermere Aquatic Ltd	01539 442121	service@aquaticboatcentres.com
DERBYSHIRE	Midland Chandlers	01283 701445	willington@midlandchandlers.co.uk
DEVON	Sleeman & Hawken Ltd	01626 778266	sales@sleeman-hawken.co.uk
ESSEX	French Marine Motors Ltd	01206 305233 01255 850303	info@frenchmarine.com
HAMPSHIRE	Marine Power Ltd	023 8040 3918	sales@marine-power.co.uk
HERTFORDSHIRE	Lee Valley Marina	01920 870499 01920 293101	stansteadmarina@vibrantpartnerships.co.uk
	Keypart Ltd	01923 276000	sales@keypart.com
LEICESTERSHIRE	Foxton Boat Services Ltd	01162 792285	foxtonboats@btinternet.com
LONDON	JSA Marine Services Ltd	01923 637995	james@jsamarineservices.com
	Lee Valley Marina	020 88061717	springfieldmarina@vibrantpartnerships.co.uk
MIDDLESEX	Lindon Lewis Marine	01932 247427	service@pushtheboatout.com
NORTHAMPTON-SHIRE	Grand Junction Boat Co.	01604 858043	info@boatrepairs.uk.com
	Midland Chandlers	01788 891401	braunston@midlandchandlers.co.uk
NOTTINGHAM	Farndon Marina	01636 705483	info@farndonmarina.co.uk
OXFORDSHIRE	Aynho Wharf	01869 338483	info@aynhowharf.co.uk
STAFFORDSHIRE	JD Boat Services Ltd	01902 791811	david@jdboats.co.uk
	Midland Chandlers	01785 712437	penkridge@midlandchandlers.co.uk
	River Canal Rescue	01785 785680	enquiries@rivercanalrescue.co.uk
	Stone Boatbuilding Company	01785 812688	stonechandlery@aol.com

	Streethay Wharf	01543 414808	office@streethaywharf.co.uk
WARWICKSHIRE	Fenny Marina Ltd	01527 876438	enquiries@craftedboats.co.uk
	Springwood Haven Leisure Ltd	0845 4566572	enquiries@springwoodhaven.co.uk
WILTSHIRE	Devizes Marina	01380 725300	sales@devizesmarina.com
WORCESTERSHIRE	ABC Leisure Group Ltd	0808 231 2848	info@abcboathire.com
	Crafted Boats Ltd	01527 876438	craftedboats@btconnect.com
	Evesham Marina	01386 768500	info@eveshammarina.co.uk
	Starline Narrowboats	01531 632003	enquiries@starlinenarrowboats.co.uk
YORKSHIRE	Rodley Boat Centre	01132 576132	rodleyboatcentre@msn.com
MONMOUTHSHIRE	Castle Narrowboats	01873 830001	info@castle.narrowboats.co.uk
EIRE	Southshore Marina & Diesel Ltd	028383 41010	info@southshoremarine.co.uk

Manuals & Brochures

Complete Owner's Manual	RDG603B5	Can be found online at: www.barrus.co.uk/divisions/marine/diesel/shire/downloads/shire-manuals/
Latest Brochure	N/A	Can be found online at: www.barrus.co.uk/divisions/marine/diesel/shire/downloads/shire-brochure/