ORIGINAL PARTS BOOK

SHIRE PARTS BOOK

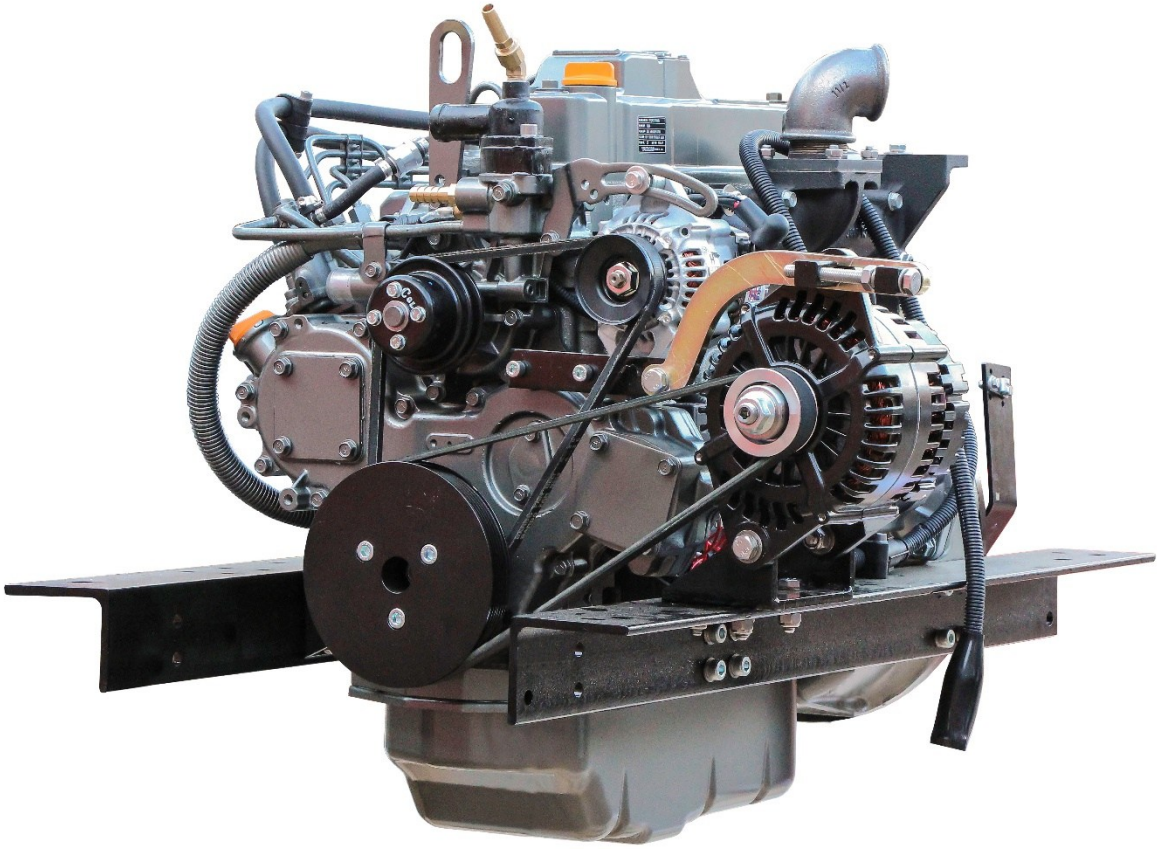

For the following engine models*:

Shire 38/40/45/50/55

*Standard Model, there may be a number of optional extras, or alternative components, that may be fitted to an engine that are not shown in this book

RDG603A39 - Issue 15 – Issued 20.01.2025

Index

Base Engine Model 3
Service Parts 4
Belts 5
Fuel Filter Head 7
Consumables 7
Control Panel Parts 8
Electrical Parts 10
Alternator Upgrade Kits for Older Engines 13
Gearbox Part 14
Pumps 16
Thermostat Parts 16
Header Tank Parts 18
Auto Tensioner Parts 18
Auto Tensioner Belt Kits 19
'E' Kit Parts 19
Hybrid System Parts 20
Engine Mount Parts 20
Exhaust Manifold 21
Engine Parts: Injectors 22
Engine Parts: Fuel Injection Pump 23
Engine Parts: Glow Plugs 23
Engine Parts: Rocker Cover Gasket & Oil Cap 24
Engine Parts: Cylinder Head Gasket 25
Accessories: Exhaust Equipment 26
Accessories: Sterngear 27
Accessories: Couplings 27
Accessories: Propellers 28
Accessories: Lever Controller 29
Dealer List 30

Manuals & Brochures..... 31

Base Engine Model

Shire Model	Base Engine
Shire 05 40	4TNV88-DSA
Shire 05 45	4TNV88-DSA
Shire 05 50	4TNV88-DSA
Shire 06 40	4TNV88-DSA
Shire 06 45	4TNV88-DSA
Shire 06 50	4TNV88-DSA
Shire 09 40	4TNV88-DSA
Shire 09 45	4TNV88-DSA
Shire 09 50	4TNV88-DSA
Shire 11 38	4TNV88-DSA
Shire 11 40	4TNV88-DSA
Shire 11 45	4TNV88-DSA
Shire 11 50	4TNV88-DSA
Shire 12 38	4TNV88-DSA
Shire 12 40	4TNV88-DSA
Shire 12 45	4TNV88-DSA
Shire 12 50	4TNV88-DSA
Shire 14 38	4TNV88-DSA
Shire 14 40	4TNV88-DSA
Shire 14 45	4TNV88-DSA
Shire 14 50	4TNV88-DSA
Shire 38	4TNV88-BDYED-SH
Shire 40	4TNV88-BDYED-SH
Shire 45	4TNV88-BDYED-SH
Shire 50	4TNV88-BDYED-SH
Shire 55	4TNV88-BDYED-SH

To access the Shire Parts Books on the internet, type the following short link into your search engine:

https://www.barrus.co.uk/divisions/marine/diesel/shire/downloads/shire-parts/?p=1

For the Shire Shop, visit: https://shireshop.co.uk/

Service Parts

	Description	Part No.	Model
	Primary Fuel Filter	RDG2238	Shire 05 40-55 Shire 06 40-55
	Primary Fuel Filter	RDG9188346	Shire 09 40-55 Shire 11 40-55 Shire 12 40-55 Shire 14 40-55 Shire 40-55
	Fuel Filter Drain Screw (black rubber washer supplied with filter)	RDG9189022	Shire 09 40-55 Shire 11 40-55 Shire 12 40-55 Shire 14 40-55 Shire 40-55
	Air Filter Element	RDG5795	All
	Oil Filter	129150-35170	All
	Secondary Fuel Filter (Primary on Shire 38 models)	119802-55810	All

Belts

	50A Alternator Belt	RDG6079	All 38-45 Shire 05 50 Shire 06 50 Shire 09 50 Shire 11 50 Shire 12 50 Shire 14 50
	50A Alternator Belt	RDG004A4	Shire 50/55 (up to Serial No 50-02830)
	50A Alternator Belt	RDG6079	Shire 50/55 (Serial No 50-02831 onwards for Model with Belt Auto Tensioner and Dry Manifold)
	50A Alternator Belt	RDG004A4	Shire 50/55 (Serial No 50-02831 onwards for Model with Belt Auto Tensioner and Wet Manifold)
	110A Alternator Belt	RDG0048974	Shire 09 40 Shire 11 38/40
	110A Alternator Belt	RDG5757	Shire 05 40 Shire 06 40 (up to Serial No 02899)
	110A Alternator Belt	RDG2254	Shire 05 45 Shire 06 40 (Serial No 02900 onwards) Shire 06 45

			(up to Serial No 041284)
	110A Alternator Belt	RDG0047511	Shire 05 45 Shire 06 45 (Serial No 041285 onwards)
	125A Alternator Belt	RDG0047511	Shire 38 (Serial No xx-02663 onwards)
	140A Alternator Belt	RDG6076	Shire 12 38/40 Shire 14 38/40
	150A Alternator Belt	RDG6076	Shire 38 (up to Serial No xx-02662) Shire 40
	160A Alternator Belt	RDG0047511	Shire 05 50/55 Shire 06 50/55 Shire 11 50/55
	160A Alternator Belt	RDG0047859	Shire 09 45-55
	170A Alternator Belt	RDG0047498	Shire 45-55
	240A Alternator Belt	RDG0047511	Shire 11 45-55
	240A Alternator Belt (240A Alternator option fitted to Shire 40 & 45)	RDG0047498	Shire 12 45-55 Shire 14 45-55 Shire 40-55

Fuel Filter Head

Description	Part No.	Model
Secondary Fuel Filter Head (Primary on 38 models)	129004-55612-9	All

Consumables

Description	Part No.	Model
Engine Oil 10W40 CD 5L Container (This can also be used for a PRM 150 and PRM 280 Gearbox) NOTE: This part number supersedes RDG2797	RDG6110	All
ATF Oil for PRM 80/90/120/125	ATF-1L	All 38
Diesel Fuel Additive 500ml Container	RDG80210219	All

Control Panel Parts

*** The Shire 11 50 and earlier models used a VDO panel which is no longer available. If the Control Panel or any of the parts on it require replacement the newer Standard/Deluxe Control Panel is required.**

	Description	Part No.	Model
	Standard Control Panel	RDG20710110	All*
	Deluxe Control Panel	RDG20710111	All*
	Ignition Switch (with keys)	RDG215A5	All
	Ignition Key (for switch RDG215A5)	RDG215A196	All
	Ignition Switch Kit (to replace ignition switches fitted before 2016)	RDG215A6 (SS1626)	All
	Tacho Gauge	RDG20710158	All
	Oil Pressure Gauge	RDG21710160	All
	Voltmeter Gauge	RDG21710161	All

	Water Temperature Gauge	RDG21710159	All
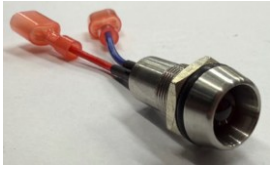	Control Panel Warning Light	RDG20910163	All
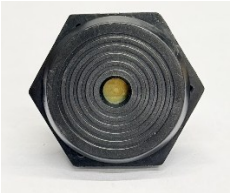	Buzzer	RDG21610164	All
	Panel Relay	RDG21410167	All
	Resistor 68 Ohm	RDG22010171 RDG220A1	All
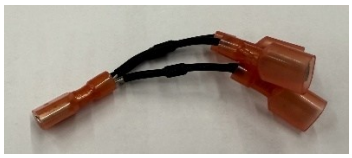	Diode Pack	RDG22310165	All
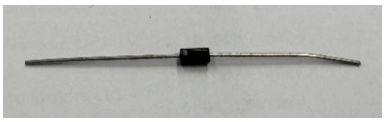	Single Diode	RDG22310166	All

Electrical Parts

	Description	Part No.	Model
	Extension Loom (2.3m)	RDG4041	All
	50A Alternator	AND0286	All
	125A Alternator (Check engine, 150A Alternator may be used)	128990-77250	Shire 38
	150A Alternator (110A / 140A / 160A Alternators originally supplied are no longer available) (Check engine, 125A Alternator may be used)	RDG20110201	All 38 All 40 Shire 05 50/55 Shire 06 45-55 Shire 09 45-55
	170A Alternator (A 170A Alternator or 240 Amp Alternator may have been supplied depending on parts availability at the time of engine manufacture)	RDG201A29	Shire 45-55
	240A Alternator (A 240A Alternator or 170 Amp Alternator may have been supplied depending on parts availability at the time of engine manufacture)	RDG2019682	Shire 11 45-55 Shire 12 45-55 Shire 14 45-55 Shire 40 (optional) Shire 45-55

	120A 24V Alternator (Optional leisure alternator)	RDG201A11	All (Optional extra)
	Plug for 24V Alternator	RDG210A6	All
	Starter Motor	410-44041	All
	Stop Solenoid	119653-77950	All
	Electric Fuel Pump	RDG504A90	All
	Water Temperature Switch	121250-44901	All (Up to Serial No 45-02817)
	Water Temperature Sender (only if Deluxe Panel is fitted)	RDG6765	Shire 05 40 Shire 06 40 Shire 09 40 Shire 11 40 All 45 (Up to Serial No 45-02817) All50/55
	Water Temperature Sender and Switch (only if Deluxe Panel is fitted)	RDG2189446	Shire 12 40 Shire 14 38/40 Shire 38-55 Shire 45 (Serial No 45-02818 onwards)

	Oil Pressure Sensor (only if Deluxe Panel is fitted)	RDG6752	Shire 05 40-55 Shire 06 40-55 Shire 38
	Yanmar Oil Pressure Switch	114250-39450	Shire 05 45-55 Shire 06 45-55 Shire 38 Shire 40
	Oil Pressure Switch / Sensor (only if Deluxe Panel is fitted)	RDG2189445	Shire 09 40-55 Shire 11 40-55 Shire 12 40-55 Shire 14 38-55 Shire 38-55
	Engine Stop Control System and Glow Plug Fuse (40 Amp)	RDG3246	All
	Control Panel Supply and Engine Start Control System Fuse (15 Amp)	RDG3245	All
	Starter Relay	RDG1396	All
	Cold Start Relay	RDG5279	Shire 38-55
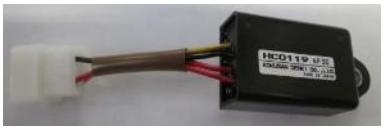	Timer	129211-77920	All
	Glow Plug Relay	119650-77911	All

Alternator Upgrade Kits for Older Engines

	170A Alternator Kit	RDG702B58	Shire 1600, 2000, 2200
	170A Alternator Upgrade Kit C/W Crankshaft Pulley (110A 12V Alternator no longer available from Prestolite)	RDG702B60	Shire models with 110A Alternators originally fitted
	170A Alternator Upgrade Kit No Crankshaft Pulley (110A 12V Alternator no longer available from Prestolite)	RDG702B61	Shire models with 110A Alternators originally fitted

Gearbox Part

	Description	Part No.	Model
	Damper Drive Plate for PRM 90 D2 / PRM 120 D2 (and all other mechanical gearboxes)	RDG2493	All 38
	Damper Drive Plate for PRM 150 D2 / D3	RDG1766	All 40-55
	Shire 60 Drive Coupling (Optional Heavy-Duty Damper for PRM 150 Gearbox)	RDG912A37	All 40-55
	Damper Drive Plate for PRM 260 / 280 D2 / D3	RDG1957	All 40-55
	PRM 90 D2 Gearbox (this replaces the PRM 120 D2 Gearbox which may be fitted)	RDG914A196	All 38
	PRM 150 D2 Gearbox (Unless the optional D3 3:1 Ratio gearbox has been fitted)	RDG1765 (RDG1959)	All 40-55
	PRM 280 D2 / D3 Gearbox	RDG914A25 (D2) RDG914A220 (D3)	
	Gearbox Oil Cooler (This replaces most previous oil coolers fitted on to engines**)	RDG909A19	All 40-55*

	Gearbox Oil Cooler Hose (Long) for PRM 150 / 280	RDG5690	All 40-55
	Gearbox Oil Cooler Hose (Short) for PRM 150 / 280	RDG5295	All 40-55
	Gearbox Oil Cooler Water Hose 28mm x 28mm ID	RDG1883	All 40/45
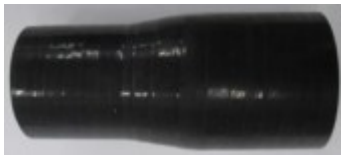	Gearbox Oil Cooler Water Hose Reducer 35-28mm ID	RDG3018381	All 38-45
	MA100A Gearbox (No longer available)	Enquire as to gearbox or drive coupling details	Shire 11 40

*** Modifications may be required for the Oil Cooler to fit**

****Engines fitted with Hangzhou Advance MA100 or MA125 require an alternative High Pressure Oil Cooler:**

RDG9098962 with 28/34mm water hose connections

RDG9099240 with 34/34mm water hose connections

Pumps

	Description	Part No.	Model
	Sump Pump ¾”	RDG2837	All 38-45
	Gearbox Pump ¾”	RDG303A12	All 50/55

Thermostat Parts

*** On single thermostat engines, remove jiggle pin to assist bleeding air form the system. ** On twin thermostat engines, remove jiggle pin and foot valve.**

	Description	Part No.	Model
	Thermostat (71°) (On all Shire 45/50 fitted to twin thermostat engines) *	129155-49801	Shire 05 40 Shire 06 40 Shire 09 40 Shire 11 38/40 Shire 12 40 All 45 (Up to Serial No 45-02817) All 50/55
	Thermostat (82°) (On Shire 05 40, Shire 06 40, Shire 05 45, Shire 06 45 and all Shire 50 models fitted to twin thermostat engines) * **	129457-49801	Shire 05 40-55 Shire 06 40-55 Shire 12 38 Shire 14 38/40 Shire 38/40 Shire 45 (Serial No 45-02818 onwards)

	Thermostat (86°) (Fitted to single thermostat engines) * **	RDG909A7	Shire 14 45-55 Shire 38-55
	Thermostat (88°) (Fitted to twin thermostat engines) **	L375-06203-2	Shire 09 40-55 Shire 11 40-55 Shire 12 40-55 Shire 14 45-55 Shire 45 (Up to Serial No 45-02817) Shire 50/55
	Thermostat Gasket (Fitted to twin thermostat)	L375-06202	Shire 09 40-55 Shire 11 40-55 Shire 12 40-55 Shire 14 45-55 Shire 45 (Up to Serial No 45-02817) Shire 50
	Thermostat Gasket (Fitted to twin thermostat)	KM385T-06209	Shire 09 40-55 Shire 11 40-55 Shire 12 40-55 Shire 14 45-55 Shire 45 (Up to Serial No 45-02817) Shire 50/55
	Thermostat Gasket (Fitted to engine) NOTE: On Shire 06 40, Shire 05 45, Shire 06 45 & Shire 05 50, Shire 06 50 the gasket is also fitted to twin thermostat housing as well	129350-49541	All

Header Tank Parts

	Description	Part No.	Model
	Header Tank Note: One outlet port drilled, one port blanked off. Will need drilling for twin hose engines.	RDG6364	All
	Header Tank Cap	RDG1723	All
	Header Tank Hose	RDG3310	All

Auto Tensioner Parts

	Description	Part No.	Model
	Auto Belt Tensioner (Standard Duty)	RDG502A5	Shire 45 (Optional Extra) Shire 50/55 (Serial No 50-02831 onwards)
	Auto Belt Tensioner (Heavy-Duty)	RE518097	Shire 45-55 Hybrid Engines

Auto Tensioner Belt Kits

Standard Leisure Alternator Tensioner Kit	RDG702B30	All
Heavy Duty Leisure Alternator Tensioner Kit	RDG702B41	All

‘E’ Kit Parts

	Description	Part No.	Model
	3.5kW ‘E’ Kit Alternator Belt	RDG6076	Shire 05 40-55 Shire 06 40-55 Shire 09 40-55 Shire 11 38-55
	3.5kW ‘E’ Kit Alternator Belt	RDG0047511	Shire 12 38-55 Shire 14 38-55 Shire 38-55
	5kW ‘E’ Kit Alternator Belt	RDG6076	Shire 05 40-55 Shire 06 40-55 Shire 09 40-55 Shire 11 38-55
	5kW ‘E’ Kit Alternator Belt	RDG0047511	Shire 12 38-55 Shire 14 38-55 Shire 38-55

Hybrid System Parts

	Description	Part No.	Model
	24 Volt Alternator Belt (Port)	RDG004A219	Shire 50/55 (From Serial No xx-02638)
	24 Volt Alternator Belt (Starboard)	RDG004A220	Shire 50/55 (From Serial No xx-02638)
	48 Volt x 60 Amp Balmar Alternator	RDG0047498	Shire 40-55 (Optional Alternator)
	Hybrid Motor Belt	RDG004B10	All Shire Hybrid Models

Engine Mount Parts

	Description	Part No.	Model
	Engine Anti-Vibration Mount	RDG3033	All
	Engine Mount Stud Kit	RDG1867	All

Exhaust Manifold

	Description	Part No.	Model
	Exhaust Blanket	RDG9047745	All 38/40 Shire 12 45 Shire 14 45 Shire 45 Shire 50/55 (Serial No 50-02831 onwards)
	Gasket (Cover Plate)	RDG1726	All
	M8 Copper Washer	RDG1738	All
	1” BSP Dowty Washer	RDG1058353	All
	Gasket (Exhaust Manifold)	129407-13110	All

Engine Parts: Injectors

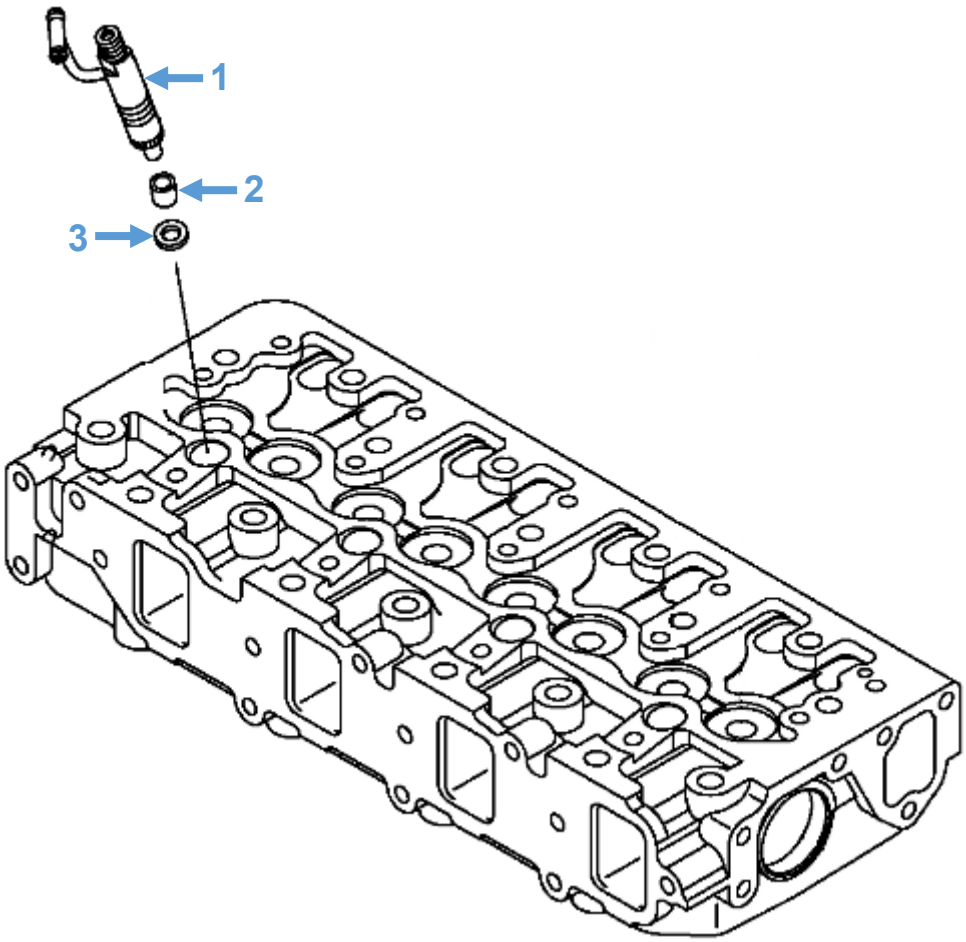

Diagram No.	Description	Part No.	Model
1	Injector	729602-53101	Shire 05 40-55 Shire 06 40-55 Shire 09 40-55 Shire 11 38-55 Shire 12 38-55 Shire 14 38-55
		729604-53200	Shire 38-55
2	Injector Protector	119802-11870	All
3	Injector Seat	119625-11880	All

Engine Parts: Fuel Injection Pump

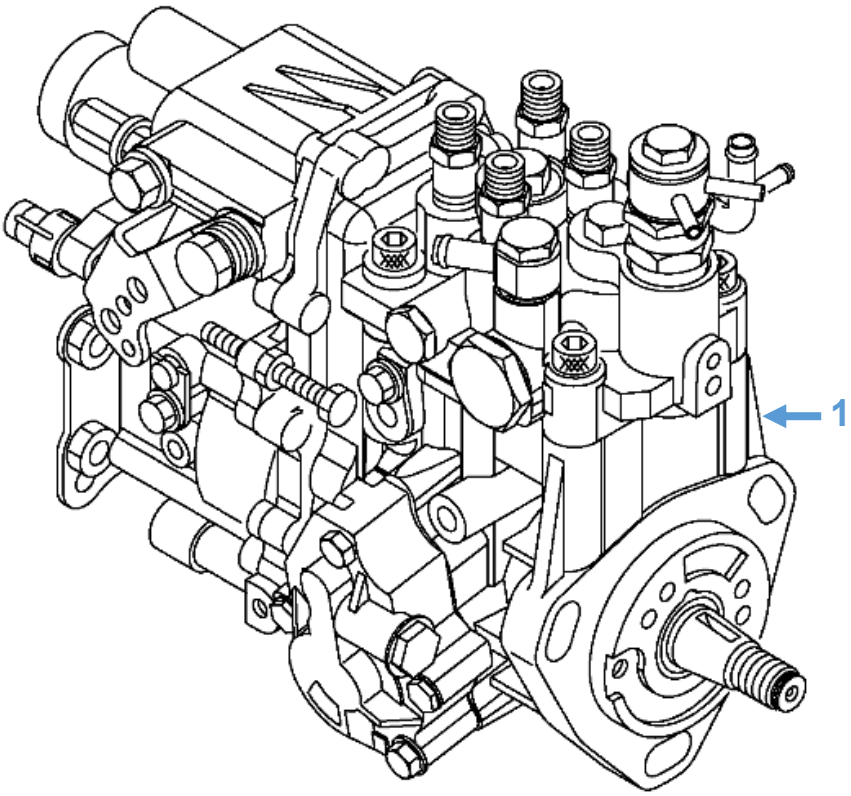

Diagram No.	Description	Part No.	Model
1	Fuel Injection Pump	729602-51310	Shire 05 40-55 Shire 06 40-55 Shire 09 40-55 Shire 11 38-55 Shire 12 38-55 Shire 14 38-55
		729688-51301	Shire 38-55

Engine Parts: Glow Plugs

	Glow Plug	129008-77810	Later Shire engines (Check visually)

Engine Parts: Rocker Cover Gasket & Oil Cap

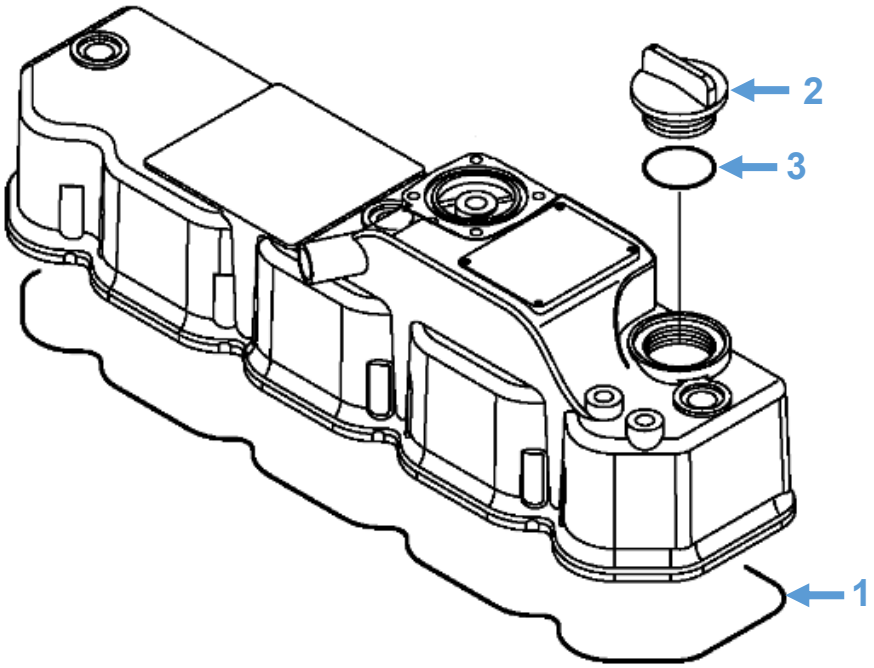

Diagram No.	Description	Part No.	Model
1	Rocker Cover Gasket	129601-11310	All
2	Oil Cap	124160-01751	All
3	Oil Cap O-Ring	24311-000320	All

Engine Parts: Cylinder Head Gasket

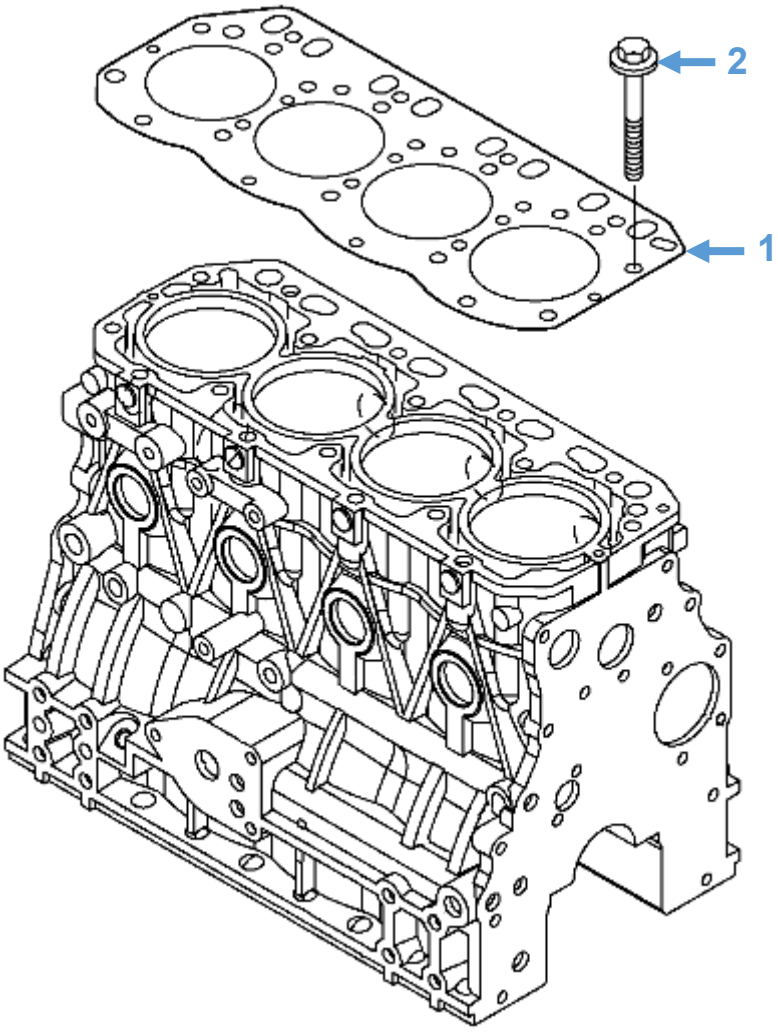

Diagram No.	Description	Part No.	Model
1	Cylinder Head Gasket	129407-01340	All
2	Cylinder Head Bolt	129150-01200	All

Accessories: Exhaust Equipment

	Description	Part No.	Model
	Exhaust Coupling 1.5”	RDG1916	All
	Flexible Exhaust Pipe Blanket	RDG2477	All
	Flexible Exhaust 1.5”	RDG1879	All
	Dry Exhaust Silencer 1.5”	RDG1911	All
	Hospital Silencer 1.5”	RDG6536	All
	1 ½” F x 1 ½” F BSP 90 Elbow	RDG5898	All

Accessories: Sterngear

	Description	Part No.	Model
	30” x 1.5” Diameter Propeller Shaft (12:1 Taper)	EPB3841	All
	35” x 1.5” Diameter Propeller Shaft	EPB5615	All
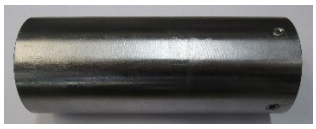	Weldable Stern Tube	EPB5534	All
	Flexible Shaft Seal (to suit 1.5” shaft)	EPB5536	All

Accessories: Couplings

	Description	Part No.	Model
	R&D Flexible Coupling Disc	RDG9129347	All
	R&D Split Boss Clamp Coupling (for 1½” propeller shaft)	RDG1079349	All
	Centaflex Type 16 Coupling 1.5”	RDG2779	All 40-55

Accessories: Propellers

	Description	Part No.	Model
	18” x 10” 3 Blade Propeller	18X103PB	All 38-45*
	18” x 12” 3 Blade Propeller	18X123PB	All 50/55*
	19” x 12” 3 Blade Propeller	19X123PB	All 50/55*

Suitable for a 1.5” Shaft, 12:1 Taper

Accessories: Lever Controller

	Description	Part No.	Model
	Single Lever Control Unit (side mounted)	RDG92010055	All
	3 Metre Cable	RDG92010056	All
	Q/R Ball Joint	RDG1792	All
	Gearbox Toggle	RDG5291	All
	Split Pin	RDG1693	All
	Cable Clamp	RDG1742	All

Dealer List

Area	Company	Telephone	Email
BERKSHIRE	Driveline Marine	0118 942 3877	tam@drivelinemarine.com
	Marcus Marine Engineering Ltd (Servicing, Repairs & Breakdowns only)	07900 890911	marcus@marcusmarine.co.uk
BRISTOL	Advance Marine Ltd	01275 815910	phil@advancemarine.co.uk
CHESHIRE	Aqueduct Marina	01270 525040	info@aqueductmarina.co.uk
	Midland Chandlers	01928 751 800	preston.brook@midlandchandlers.co.uk
	Nantwich Canal Centre Ltd	01270 625122	info@nantwichcc.com
CORNWALL	Black Dog Marine	01503 265898	blackdogmarine@googlemail.com
CUMBRIA	Windermere Aquatic Ltd	01539 442121	service@aquaticboatcentres.com
DERBYSHIRE	Midland Chandlers	01283 701445	willington@midlandchandlers.co.uk
DEVON	Sleeman & Hawken Ltd	01626 778266	sales@sleeman-hawken.co.uk
ESSEX	French Marine Motors Ltd	01206 305233 01255 850303	info@frenchmarine.com
HAMPSHIRE	Marine Power & Servicing Ltd	023 8040 3918	sales@marine-power.co.uk
HERTFORDSHIRE	Lee Valley Marina	01920 870499 01920 293101	stansteadmarina@vibrantpartnerships.co.uk
	Keypart Ltd	01923 276000	sales@keypart.com
LEICESTERSHIRE	Foxton Boats Ltd	01162 792285	foxtonboats@btinternet.com
LONDON	JSA Marine Services Ltd	07498 637995	james@jsamarineservices.com
	Lee Valley Marina	020 88061717	springfieldmarina@vibrantpartnerships.co.uk
MIDDLESEX	Lindon Lewis Marine	01932 247427	service@pushtheboatout.com
NORTHAMPTON	Grand Junction Boat Co.	01604 858043	info@grandjunctionboats.co.uk
	Midland Chandlers	01788 891401	braunston@midlandchandlers.co.uk
NOTTINGHAMSHIRE	Farndon Marina	01636 705483	info@farndonmarina.co.uk
OXFORDSHIRE	Aynho Wharf	01869 338483	info@aynhowharf.co.uk
STAFFORDSHIRE	J D Boat Services Gailey Ltd	01902 791811	david@jdboats.co.uk
	Midland Chandlers	01785 712437	penkridge@midlandchandlers.co.uk
	River Canal Rescue Ltd	01785 785680	enquiries@rivercanalrescue.co.uk
	Stone Boat Building Chandlery	01785 812688	stonechandlery@aol.com
	Streethay Wharf Ltd	01543 414808	office@streethaywharf.co.uk

WARWICKSHIRE	Fenny Marina Ltd	01527 876438	enquiries@craftedboats.co.uk
	Springwood Haven Leisure Ltd	08454 566572	enquiries@springwoodhaven.co.uk
WILTSHIRE	Devizes Marina	01380 725300	sales@devizesmarina.com
WORCESTERSHIRE	ABC Leisure Group Ltd	0808 231 2848	info@abcboathire.com
	Crafted Boats Ltd	01527 876438	craftedboats@btconnect.com
	Evesham Marina	01386 768500	info@eveshammarina.co.uk
	Starline Narrowboats	01531 632003	enquiries@starlinenarrowboats.co.uk
YORKSHIRE	Rodley Boat Centre	01132 576132	rodleyboatcentre@msn.com
MONMOUTHSHIRE	Castle Narrowboats	01873 830001	info@castlenarrowboats.co.uk
EIRE	Southshore Marine & Diesel Ltd	028383 41010	info@southshoremarine.co.uk

Manuals & Brochures

Complete Owner's Manual	RDG603B4	Can be found online at: www.barrus.co.uk/divisions/marine/diesel/shire/downloads/shire-manuals/
Latest Brochure	N/A	Can be found online at: www.barrus.co.uk/divisions/marine/diesel/shire/downloads/shire-brochure/