ORIGINAL INSTRUCTION

SHIRE WORK BOAT ENGINE MANUAL

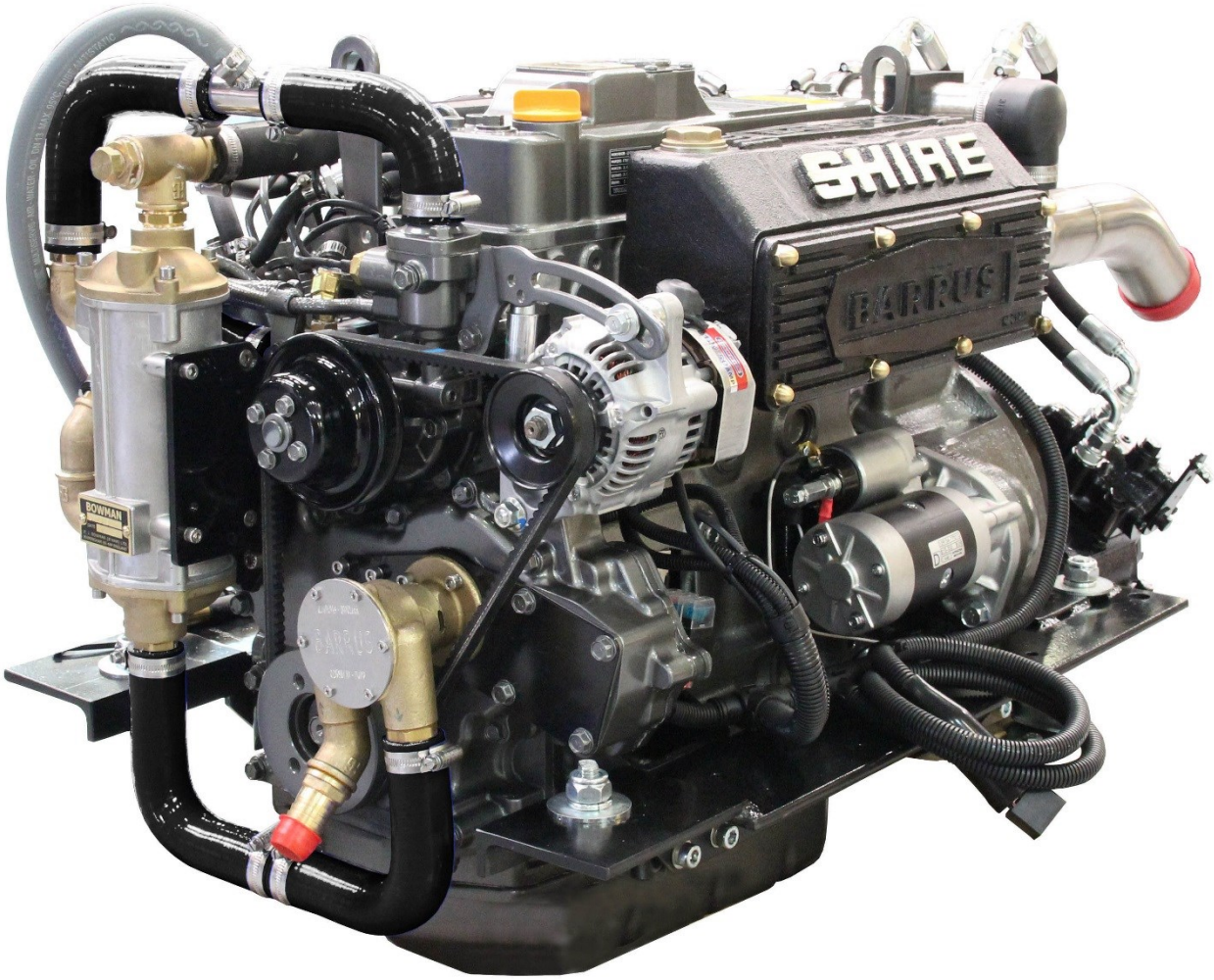

For the following engine models*:

SHIRE 40 WB

SHIRE 50 WB

*Standard Model, there may be a number of optional extras, or alternative components, that might be fitted to an engine that are not shown in this book.

RDG603A22 – Issue 24

SAFETY

E.P. Barrus is concerned for your safety. We use safety statements throughout the manual to call your attention to the potential hazards associated with the operation of your Shire engine.

Follow the precautions listed throughout the manual before operation, during operation and during servicing/maintenance procedures for your safety, the safety of others and to protect the performance of your engine.

Safety alert symbol appears throughout the manual. It means attention, be alert as your safety is involved. Please read and follow the message that appears after the safety alert symbol.

NOTICE:	This indicates a situation which can cause damage to the machine, personal property and/or the environment or cause the equipment to operate improperly
CAUTION:	This indicates a hazardous situation which, if not avoided, could result in minor or moderate injury.
WARNING:	This indicates a hazardous situation which, if not avoided, could result in death or serious injury.
DANGER:	This indicates a hazardous situation which, if not avoided, will result in death or serious injury.

Engine Details

Engine Serial Number:	

Please enter your engine serial number in the space provided above. Please quote the engine identification number during any enquiry or when ordering spare parts. Information about the engine serial number and its location on the engine can be found in **SECTION 2** of the manual.

Shire Engine Manuals and Shire Parts Books

SCAN ME

To access the complete Shire Engine Manuals and Shire Parts Books on the internet type the following short links into your search engine or just scan the QR code above.

https://shireshop.co.uk/ - Shire Shop
https://www.barrus.co.uk/shire-manuals/ - Complete Shire Engine Manuals
https://www.barrus.co.uk/shire-parts/ - Shire Parts Books

Operators Manual

NOTICE:

THIS MANUAL FORMS AN INTEGRAL PART OF THE ENGINE IT ACCOMPANIES, IF A TRANSFER OF TITLE OCCURS, IT MUST ALWAYS BE HANDED OVER TO THE NEW OWNER.

Thank you for purchasing this Shire Work Boat Engine from E.P.Barrus. This manual has been compiled to help you to operate your engine and its associated parts with safety and pleasure. Please read it carefully in conjunction with the Yanmar and PRM Gearbox Manuals and familiarise yourself with the engine and its parts before operation. The PRM Gearbox Manual is also available from the PRM website:

www.prm-newage.com

If the engine is fitted with an E-Kit and/or Hybrid options, please also read the supplied manuals for them carefully.

The information and recommendations given in this manual are based on the latest information available at the time of publication. E.P.Barrus reserve the right to change the specification of its products and manuals without prior notice.

Depending upon the equipment specification of the engine and accessories fitted, there may be discrepancies with the information presented in this handbook. No claims may be pursued in this respect.

WARRANTY

The Shire UK Limited Warranty provides coverage for up to five years or 2000 hours (whichever occurs first) for recreational users and three years or 2000 hours (whichever occurs first) for commercial users from the date of warranty commencement. This is dependent on the following conditions.

This covers the majority of Shire Engine components with the exception of the items as stated in this document.

To ensure that you have been registered for your warranty, please detach and fill in the form on the back of this manual.
Return it to the address given or email it to Richard.Cooke@barrus.co.uk
The Warranty will only apply if the following have been carried out and the registration form has been completed and returned to Barrus.

The warranty period begins when either the owner registers the engine or it is triggered automatically. A discretionary period of 6 months is given following the delivery of the engine (to allow for installation and commissioning), following this the warranty period will automatically start.

The repair or replacement of parts, or the performance of service under this warranty, does not extend the life of this warranty beyond its original expiry date.

TERMS
It is the responsibility of the boat builder or owner to ensure the Shire Engine is registered for warranty.

The Warranty will only apply if the following have been carried out:

- The installation is in full compliance with the requirements defined in the manual and the checklist completed and signed by the engine installer.
- A copy of completed engine installation checklist accompanies the warranty registration form.
- The boat builder or engine installer has completed the Boat Builder Section on the Service Record Card (located at the back of the manual) regarding hand over and commissioning of boat.
- The engine and ancillary systems are installed in compliance with current and applicable national and international standards.
- The maintenance has been completed to the full requirements, using genuine parts and recorded in the manual.

SAFETY
E.P Barrus staff or their representatives can only carry out warranty repairs if there is suitable and safe access to the boat and engine room.

PRM GEARBOXES
PRM Gearboxes are covered by a three year warranty for recreation users and two years for commercial users.

ELECTRICAL SYSTEMS
Shire Engine alternator, starter motor and electrical components are subject to a limited one year warranty.

FUEL SYSTEMS
Fuel injection and supply equipment including the injectors and pump(s) are subject to a limited one year warranty.

It is a condition of the warranty that a separate water trap is fitted between the fuel tank and the engine fuel lines (in addition to the filters fitted to the engine). The fuel tank should always be kept clear of dirt, water and any other contamination. It is not recommended that the fuel tank be run completely empty as this will induce air into the fuel system and can cause fuel injection or starting system damage- which would not be covered by the warranty.

Upon installation the fuel system should be pressure or vacuum tested to ensure no leaks are present. Poor quality fuel systems can cause engine fuel injection system damage which is not covered by the warranty. The fuel system should be fully primed ahead of engine starting- failure to do so can cause damage to the engine starting system and fuel system- this damage is not covered by the warranty.

POOR QUALITY FUEL
Poor running (including smoking) engines that are being run (or have been run) on low quality or contaminated fuel are not covered by the warranty. Any replacement parts that are required as a consequence of using incorrect or low quality fuel are not covered by warranty.

Engine and fuel equipment is not covered by warranty if bio-diesel that does not comply with EN15940 is used (See 5. Refuelling of Section 6 – Operation).

Only fuel fully compliant with EN590 or EN15940 should be used in Shire Engines. Failure to comply with this may invalidate the warranty.

WATER PUMPS
Seawater and raw water pumps and their components are wearing parts. The pump body and bearings are covered for the duration of one year. Cover seals, shaft seals and impellors are not covered by warranty.

CONDITIONS THAT MUST BE MET IN ORDER TO OBTAIN WARRANTY COVERAGE

Warranty coverage is only available from EP Barrus Ltd. Routine maintenance outlined in the Owner's Manual must be performed using genuine parts in order to maintain warranty coverage. If the customer performs maintenance to an insufficient level, Barrus reserves the right to withdraw warranty coverage.

WARRANTY CLAIMS

Warranty claims must be made by either an authorised dealer or directly to EP Barrus.

The dealer or boat builder will arrange for the inspection and any necessary repairs. If the repairs carried out are not covered by the warranty, the purchaser shall pay for all related labour and material, and any other expenses associated with that service.

Any claim should be made as soon as possible, and no later than two weeks after the initial discovery of the defect. No agent outside the EP Barrus Ltd network should be instructed before the defect has been reported and agreement made with EP Barrus Ltd.

WHAT IS NOT COVERED

This limited warranty does not cover the following:

- Routine maintenance and service items,
- Adjustments,
- Normal wear and tear,
- Damage caused by abnormal or incorrect use,
- Operation of the product in a manner inconsistent with the recommended operation/duty cycle,
- Accident, submersion,
- Improper installation (i.e. an installation not consistent with the requirements laid out),
- Systems using or affected by an accessory or part not manufactured or sold by EP Barrus Ltd,
- Systems that have been altered or modified (including addition of electrical systems such as charge boosters or other electrical management products),
- Expenses related to crane-out, launch, towing, storage, telephone, rental, inconvenience, slip fees, insurance coverage, loan payments, loss of time, loss of income, or any other types of accidental or consequential loss or damages,

Engine and engine starting systems are not covered by warranty if it is found that the engine start battery or supply circuit/system is not of the correct specification. Or if the engine start battery is partially or fully discharged.

Damage due to rust or corrosion, submersion, or unreasonable exposure to the environment, such as exposure to high humidity, rain fall, or seawater, or conditions resulting in the freezing of cooling water are not covered.

Water ingression of any kind into the engine via any means (other than the cooling system) will void the warranty. It is the responsibility of the owner/installer to ensure that no water can enter the engine during use or storage.

The standard alternators fitted to Shire Engines are not suitable for charging lithium-ion batteries. If the standard alternators are used for charging lithium-ion batteries, they will not be covered under warranty. If lithium-ion batteries are to be used a specialist alternator will be required.

FREQUENT RUNNING

To ensure ongoing and reliable operation, Engines should not be left without running for periods of more than two weeks at any one time. If not required to run, every two weeks the engine should be started and run under load until correct operating temperature is reached- this should then be maintained for a minimum of 15 minutes.

TRANSFER OF WARRANTY

The warranty is valid for the first owner of the Shire engine and is transferrable only at the discretion of EP Barrus Ltd.

DELIVERY

Damage caused during transport (or before delivery) must be reported to the courier and the delivery signed for highlighting it. Failure to do so may result in the damage not being covered.

Any parts missing from a delivery should be reported to EP Barrus within 3 working days. Photographs of the shipment including packaging will be required.

Note. Engines and ancillary parts are photographed, recorded and stored prior to shipment to the customer.

River Canal Rescue Membership

RCR offer a number of support packages and services to give the inland boater peace of mind in the event of an incident, breakdown or emergency. They offer year round 24/7 national breakdown and recovery assistance for members on the inland waterways.

Please see RCR leaflet included with the other engine documents for more details. The leaflet is stamped and RCR will offer a first year 20% discount to all new Shire engine owners. To gain this discount please call RCR on 01785785680. Please have ready to hand your Shire warranty registration date.

Note: This does not affect the normal Shire engine warranty arrangement.

Index

Page

SECTION 1 – Safety Precautions 13

1. General 13
2. Lifting 13
3. Rotating Shafts and Belts 14
4. Exhaust System 14
5. Launching and Lifting Boats 15
6. Batteries 15

SECTION 2 – Engine Identification 16

SECTION 3 – Component Identification 17

1. Shire 40 Work Boat 17
2. Shire 50 Work Boat (Shire 40 WB Optional) 18

SECTION 4 – Control Panel 19

1. Standard Control Panel 19
2. Deluxe Control Panel 19
3. Control Panel Overview 20
4. Warning Light Procedure 20
5. Overall Dimensions of the Standard Control Panel 22
6. Overall Dimensions of the Deluxe Control Panel 22

SECTION 5 – Installation 23

1. Ventilation 23
2. Engine Beds 23
3. Pressurised Water Header Tank 23
4. Shaft Connection and Propeller Selection 24
5. Engine Anti-Vibration Mounts 24
6. Engine Alignment 27
7. Engine Inclination 27
8. Electrics 28
9. Electrical Options 29

10. Engine Oil 29
11. Fuel 30
12. Coolant 31
13. Control Cables 32
14. Domestic Battery Bank 33
15. Control Panel 34
16. Exhaust System 35
17. Seawater Strainer 38
18. Seawater Pump Hose Minimum Inlet Size 38
19. Hydraulic Drive Transmissions 39
20. Hydraulic Pump Drive Option 39
21. Calorifiers 40
22. Control Cables 40
23. Front Power Take Stub Shaft Option 40
24. PRM 280DP Gearbox with Power Take Off (Option) 41
25. Engine Start Battery 41
26. Additional Wiring Connection 41
27. Installation Check List 42
SECTION 6 – Operation 43
1. Starting the engine for the first time 43
2. Starting Procedure 43
3. Stopping Procedure 44
4. Full Load Running 44
5. Refuelling 44
6. Diesel Fuel Additive 45
7. Exhaust Back Pressure (Work Boat with dry exhaust) 45
8. Single Shift Control Lever Side Mount Operation - Optional (RDG9210055) 45
SECTION 7 – Service Procedure 46
1. Engine Oil and Filter Change 46
2. Air Filter Check and Change 47

3. Gearbox Oil Change 47
4. Disposal of Oil and Related Items 48
5. Primary Fuel Filter Drain 49
6. Primary and Secondary Fuel Filter Change 50
7. Fuel System Bleeding 51
8. Cooling System 51
9. Belt Adjustment 52
10. Belt Maintenance 52
11. Belt Replacement 53
12. Control Panel Maintenance 54
13. Sacrificial Anode Change 55
14. Raw Water Pump Impellor Change 55
15. Engine Heat Exchanger Tube Stack Flushing 56
16. Winterization of Seawater Cooling System 56

SECTION 8 – Service Schedule 57

1. Specifications and Capacities 57
2. Service Intervals 58

SECTION 9 – Wiring Diagrams 59

1. Engine Wiring Diagram Shire 40, & 50 59
2. Standard Control Panel Wiring Diagram 60
3. Deluxe Control Panel Wiring Diagram 61
4. Prestolite 24 Volt 120 Amp Alternator Wiring Diagram 62

SECTION 10 – Technical Data 64

1. Engine Data 64
2. Return Diesel System 64
3. Dry Weight of Engine Data 65

SECTION 11 – Dealer List 66

SECTION 12 – Shire Parts 68

SECTION 13 – Afterlife Recycling 71

SECTION 14 - Declarations 72

1. Declaration of Conformity for Recreational Craft Propulsion Engine with the requirements of Directive 2013/53/EU. 72

2. Declaration of Conformity for Recreational Craft Propulsion Engine with the requirements of the Recreational Craft Regulations 2017 (UKCA Marking). 73

3. Declaration of Incorporation of Partly Completed Machinery 74

4. EU Declaration of Conformity with the Exhaust Emissions Requirements of Directive 2013/53/EU 75

SECTION 15 – Shire Service Record Card 76

SECTION 1 – Safety Precautions

1. General

NOTICE:
NEVER PERMIT ANYONE TO OPERATE THE ENGINE WITHOUT PROPER TRAINING.

It is the responsibility of the installer/operator to ensure that the finished installation complies with CE Marking, UKCA Marking, relevant Health & Safety requirements, the Recreational Craft Directive and or any other legislative requirements before commissioning.
Ensure that the engine battery isolator switch is in the off position and the key removed from the control panel before carrying out any maintenance or repairs.

Ensure that all installations and boat alterations comply with any appropriate local, regional, national or international regulations. When installing new propulsion systems (that are not identical to the original ones) into existing craft, a new vessel Post Construction Assessment will be required, and carried out by an independent notified body.

2. Lifting

DANGER:
CRUSH HAZARD! NEVER STAND UNDER A HOISTED ENGINE. IF THE HOIST MECHANISM FAILS, THE ENGINE WILL FALL ON YOU, CAUSING SERIOUS INJURY OR DEATH.

The Lifting points supplied with the engine are for lifting the engine/gearbox only. A suitable spreader bar must be employed to prevent over-stressing either bracket during any lift.

3. Rotating Shafts and Belts

WARNING:

SEVERE HAZARD! KEEP HANDS AND OTHER BODY PARTS AWAY FROM MOVING/ROTATING PARTS. WEAR TIGHT FITTING CLOTHING AND KEEP YOUR HAIR SHORT OR TIE BACK. REMOVE ALL JEWELLERY BEFORE COMMENCING WORK. CHECK BEFORE STARTING THE ENGINE THAT ANY TOOLS OR RAGS USED DURING MAINTENANCE HAVE BEEN REMOVED FROM THE AREA.

The engine and its accessories are not intended to be put into operation until they are integrated into the boat as a whole. No person should be in the engine compartment and the engine cover or deck hatches should be closed whilst the engine is running.

4. Exhaust System

WARNING:

EXHAUST HAZARD! NEVER OPERATE ENGINE IN A BOATS ENGINE BAY WITHOUT PROPER VENTILATION. NEVER BLOCK VENTS OR OTHER MEANS OF VENTILATION. ALL COMBUSTION ENGINES CREATE CARBON MONOXIDE GAS DURING OPERATION. ACCUMULATION OF THIS GAS COULD CAUSE ILLNESS OR EVEN DEATH.

WARNING:

BURN HAZARD! WAIT UNTIL THE EXHAUST COOLS BEFORE YOU TOUCH IT.

WARNING:

ENSURE EXHAUST SYSTEM HAS COOLED DOWN AND APPROPIATE PPE (GLOVES, MASK, SEALED GOGGLES) IS WORN WHEN WORKING ON THE EXHAUST SYSTEM.

Exhaust gases may have temperatures as high as 650°C and contain elements which are harmful if ingested.

It is therefore essential that exhaust systems are gas tight and lagged to prevent accidental burning and inhalation of exhaust gases when inside the boat cabin.

5. Launching and Lifting Boats

Care must be taken when launching or craning new boats into or out of the waterway, so that water does not enter the engine via the exhaust system or air vents. It is recommended that these are blocked temporarily whilst undertaking this procedure.

6. Batteries

DANGER:

EXPLOSION HAZARD! NEVER SHORT OUT THE BATTERY TERMINALS, INCLUDING WHEN CHECKING THE REMAINING BATTERY CHARGE THIS WILL RESULT IN A SPARK AND MAY CAUSE AN EXPLOSION OR FIRE.

WARNING:

BURN HAZARD! BATTERIES CONTAIN SULPHURIC ACID. NEVER ALLOW BATTERY FLUID TO COME IN CONTACT WITH SKIN, EYES OR CLOTHING. SEVERE BURNS COULD RESULT. MAKE SURE THE CORRECT PERSONAL PROTECTION EQUIPMENT IS WORN.

- Batteries can produce explosive gases; keep sparks and flames away from the battery.

NO SMOKING

- Batteries contain sulphuric acid; if splashed on skin or eyes, flush well with water and seek medical advice.
- Keep battery tops and battery compartment ventilated at all times.
- If disconnecting the battery; remove the earth lead **FIRST**; and re-connect it last.
- If charging the battery; ensure that the charger is switched off before connecting and disconnecting.
- Do not tip the battery on its side.
- Please see label on battery or manufacturer's instructions for specific information.

SECTION 2 – Engine Identification

The engine serial number can be found engraved into the brass plate on the top of the engine rocker cover and stamped to the crankcase next to the starter motor.

An example of the engine identification plate is shown below (**Figure 1**):

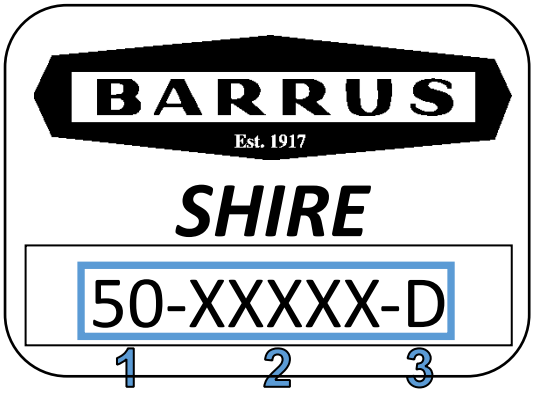

	Description
1	Engine Model
2	Serial Number
3	Indicates Model Type or Optional Extras: WB = Work Boat D = Deluxe Panel 3 = 3:1 Ratio Gearbox

Figure 1: Engine Identification Badge

Description of Models:

Abbreviation	Type of Engine	Description*
CB	Canal Boat	Keel cooled dry exhaust manifold
40 WB	Work Boat	Seawater/Heat Exchanger cooled, dry exhaust manifold with either a dry exhaust system (same as a Canal Boat) or water injected exhaust system. Can also be used for sea going applications
50 WB	Work Boat	Seawater/Heat Exchanger cooled, water cooled (WM) exhaust manifold with either a dry exhaust system (same as a Canal Boat) or water injected exhaust system. Can also be used for sea going applications

***Note**: There are a number of other optional extras that may be fitted to an engine that are not listed here.

A list of common item service part numbers can be found in **Section 12**, Shire Parts.

SECTION 3 – Component Identification

1. Shire 40 Work Boat

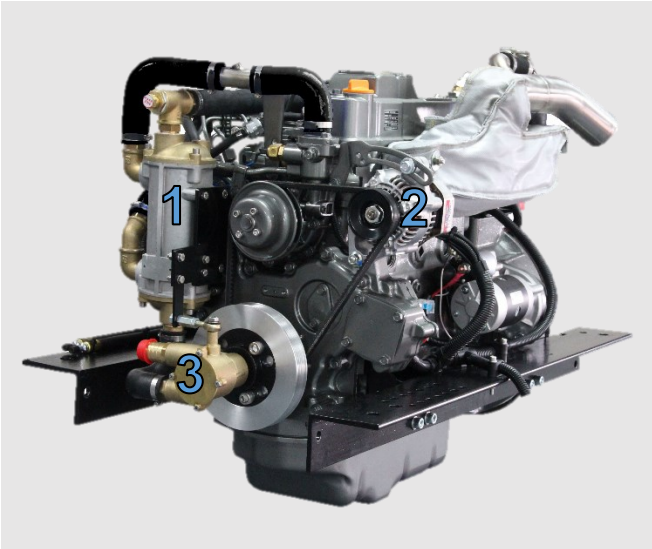

Figure 2: Shire 40 Left Side (Viewed from front)

	Description*
1	Coolant Heat Exchanger
2	50 Amp 12 Volt Alternator
3	Seawater Pump (Crankshaft Driven)

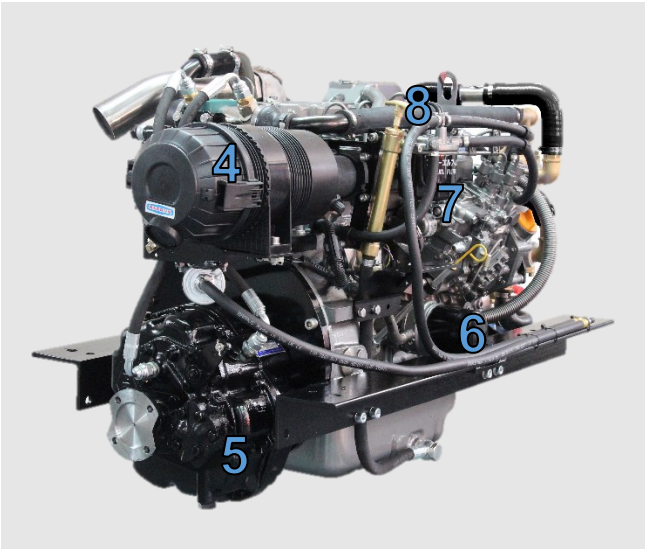

Figure 3: Shire 40 Right Side (Viewed from rear)

	Description*
4	Air Filter
5	Gearbox
6	Oil Filter
7	Secondary Fuel Filter
8	Engine Sump Pump

***Note**: There are a number of other optional extras that may be fitted to an engine that are not shown here.

2. Shire 50 Work Boat (Shire 40 WB Optional)

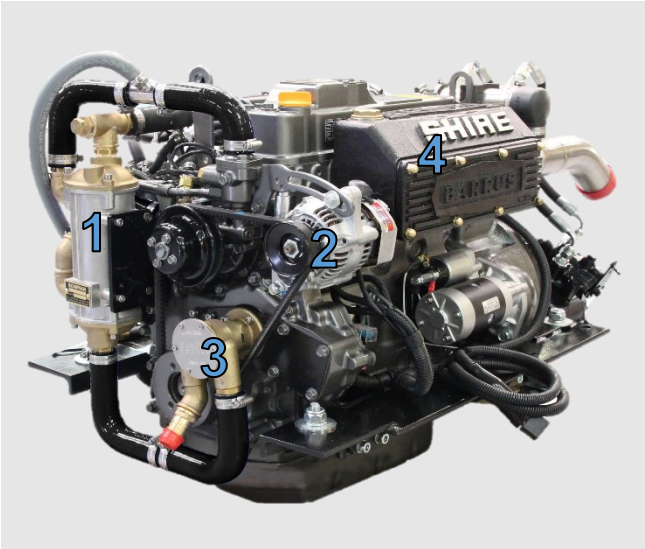

Figure 4: Shire 50 Left Side (Viewed from front)

	Description*
1	Coolant Heat Exchanger
2	50 Amp 12 Volt Alternator
3	Seawater Pump (Camshaft Driven)
4	Water Cooled Manifold

Figure 5: Shire 50 Right Side (Viewed from rear)

	Description*
5	Air Filter
6	Gearbox
7	Oil Filter
8	Secondary Fuel Filter
9	Engine Sump Pump

***Note**: There are a number of other optional extras that may be fitted to an engine that are not shown here.

SECTION 4 – Control Panel

1. Standard Control Panel

Figure 6: Standard Control Panel

	Description
1	Tachometer Gauge
2	Hour Meter
3	Water Temperature Warning Light
4	Oil Pressure Warning Light
5	50A Alternator Charge Warning Light
6	150/240A Alternator Charge Warning Light
7	Glow Plug Light
8	Key Flap and Ignition Switch

2. Deluxe Control Panel

Figure 7: Deluxe Control Panel

	Description
1	Tachometer Gauge
2	Hour Meter
3	Water Temperature Warning Light
4	Oil Pressure Warning Light
5	50A Alternator Charge Warning Light
6	150/240A Alternator Charge Warning Light
7	Glow Plug Light
8	Key Flap and Ignition Switch
9	50A Alternator Output Gauge
10	Oil Pressure Gauge
11	Water Temperature Gauge

3. Control Panel Overview

- All Shire engines are supplied with a control panel.
- Depending on the model of Shire engine, the control panel will either be a standard control panel or a deluxe control panel. The following table shows which panel comes with each type of engine as standard. Please note that on certain Shire engines a different type of control panel can be ordered as an option.

Engine	Control Panel Supplied*
Shire 40	Standard Control Panel
Shire 50	Deluxe Control Panel

* Panel supplied as standard. On certain engines a different control panel may be supplied as an option

4. Warning Light Procedure

- When the ignition is first turned on, the control panel warning lights will come on as a bulb check. When the engine is started the warning lights will go out. Please note that the water temperature warning light and glow plug light operate slightly differently.

- The water temperature warning light will only come on for a brief period of time when the ignition is first turned on as a bulb check. It will then only illuminate in the case of the engine coolant temperature exceeding the maximum safety level.

- The glow plug light will come on when the ignition is first turned on for 5 – 8 seconds to indicate the heating system is operational. When the light goes out the engine can be started.

- Whilst the control panel is in operation all the gauges are backlit. This does not indicate a fault and is a normal function for the control panel.

- If any of the warning lights on the control panel come on **whilst** the engine is running, please follow the correct procedure as shown in the following table.

In the event of a fault, only trained and qualified personnel should undertake repairs on the engine.

	Description	Procedure for Warning Light
1	Tachometer Gauge	-
2	Hour Meter	-
3	Water Temperature Warning Light	Reduce the engine revs and stop the engine within one or two minutes. Check the coolant level (refer to **8. Cooling System of SECTION 7 - SERVICE PROCEDURE**). If the coolant level is incorrect, fill it to the correct level (refer to **8. Cooling System of SECTION 7 - SERVICE PROCEDURE**) and restart the engine. If the coolant level is correct and the fault is still present, or there is a coolant leak, please contact your local dealer.
4	Oil Pressure Warning Light	Stop the engine immediately. Contact your local dealer. Failure to stop the engine may result in permanent engine damage.
5	50A Alternator Charge Warning Light	This indicates that the alternator has stopped charging. The engine can still be operated for a short period of time. Contact your local dealer.
6	150/240A Alternator Charge Warning Light*	This indicates that the alternator has stopped charging. The engine can still be operated for a short period of time. Contact your local dealer.
7	Glow Plug Light	This indicates that the cold start system is operating. If the light fails to illuminate during the starting procedure contact your local dealer.
8	Key Flap and Ignition Switch	-
9	50A Alternator Output Gauge	-
10	Oil Pressure Gauge	-
11	Water Temperature Gauge	-

*Only applicable if a second alternator is fitted to the engine.

5. Overall Dimensions of the Standard Control Panel

(All Dimensions are in mm)

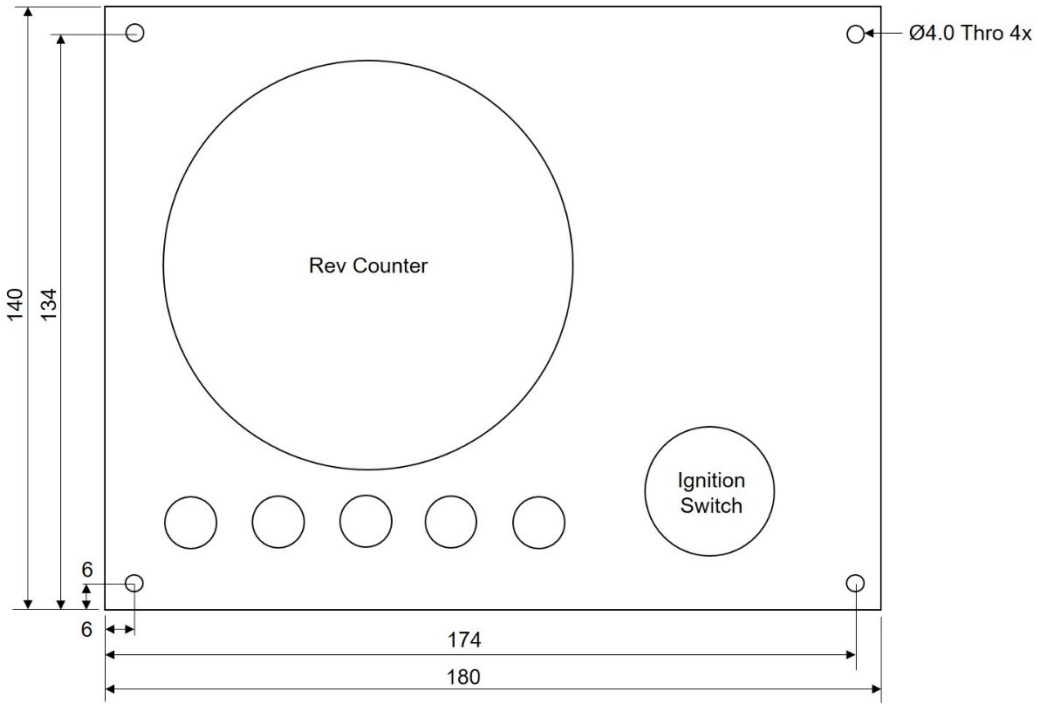

Figure 8: Standard Control Panel Dimensions

6. Overall Dimensions of the Deluxe Control Panel

(All Dimensions are in mm)

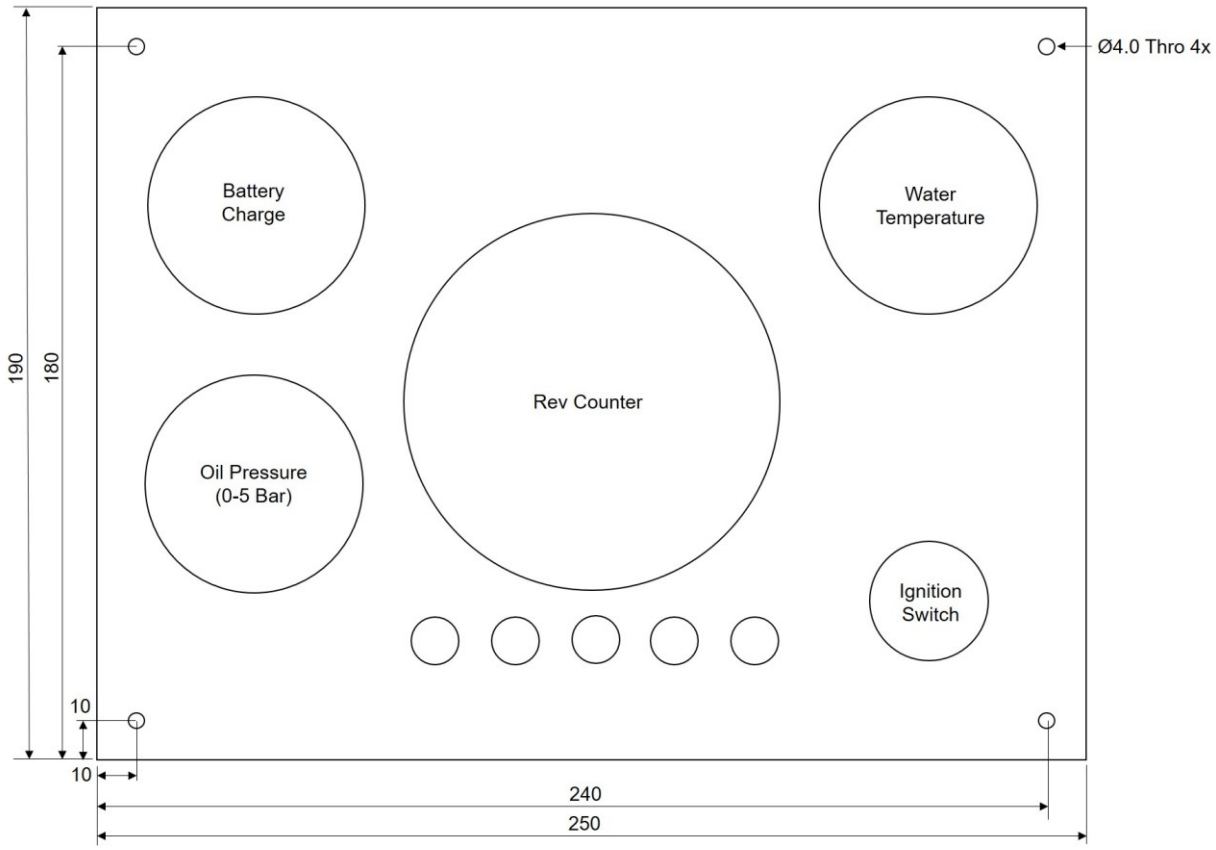

Figure 9: Deluxe Control Panel Dimensions

SECTION 5 – Installation

NOTICE:
REFER TO THE SHIRE AND YANMAR MANUALS PRIOR TO INSTALLING THE ENGINE.

1. **Ventilation**

- All internal combustion engines radiate heat and require cool, clean air to aid complete combustion.
- Please ensure that adequate engine room ventilation is provided, by fitting at least two vents of an aperture of not less than 10,000mm2 each (16in^2).

An allowance must be made for any grills, louvres or bends placed in the airflows and generally an increase of 25% in area is sufficient to overcome any restriction problems.

2. **Engine Beds**

- These should be a minimum of 10mm thick, extended rearward and be welded to the hull and forward to the bulkhead. Webs or gussets must be welded in place midway to prevent flexing.

3. **Pressurised Water Header Tank**

WARNING:
SCALD HAZARD! NEVER REMOVE THE HEADER TANK CAP IF THE ENGINE IS HOT. STEAM AND HOT COOLANT MAY SPURT OUT AND CAUSE INJURY. TIGHTEN THE HEADER TANK CAP SECURELY AFTER BEING REMOVED. STEAM CAN SPURT OUT DURING ENGINE OPERATION IF THE CAP IS LOOSE.

- The pressurised header tank should be mounted higher than the level of the engine and no more than 1 metre from the engine. This is to prevent cooling system air locks.

4. Shaft Connection and Propeller Selection

- Some type of flexible coupling must be used to connect the gearbox output flange to the propeller shaft flange. Various coupling flanges are widely available to assist with this.
- Please note, underperforming engines will not be covered under warranty if the cause of the poor performance is found to be due to the use of an inappropriate propeller.

5. Engine Anti-Vibration Mounts

- Ensure that the engine feet do not end up at the top of the thread on the engine mounts, this puts undue pressure on them and can result in excessive engine movement and premature mount failure. If this is a problem, put steel packing plates under the mounts. Packing plates 25mm thick are available: Order RDG3906 Engine mount spacer. Alternatively, they can be manufactured locally.
- Ensure that the engine has been installed for at least 24 hours before shaft alignment is checked, to allow the mounts time to settle under the engine weight.
- Ensure that the anti-vibration mount centre screw is sufficiently raised so as not to touch the engine bed. If this occurs, excessive engine vibration will be experienced through the hull.
- For best results, fit the front AV mounts into the front holes in the engine rails. If the engine room space is a problem the mounts can be fitted slightly further back in the alternative holes and the front of the rail cut off – leaving 50mm of material to retain strength (measuring from the centre of the mount hole to the front end of the rail). Note: This procedure is only possible on non- 'E' Kit engines and may result in a very slight increase in vibration. AV mount installation points are shown on (**Figure 12**).

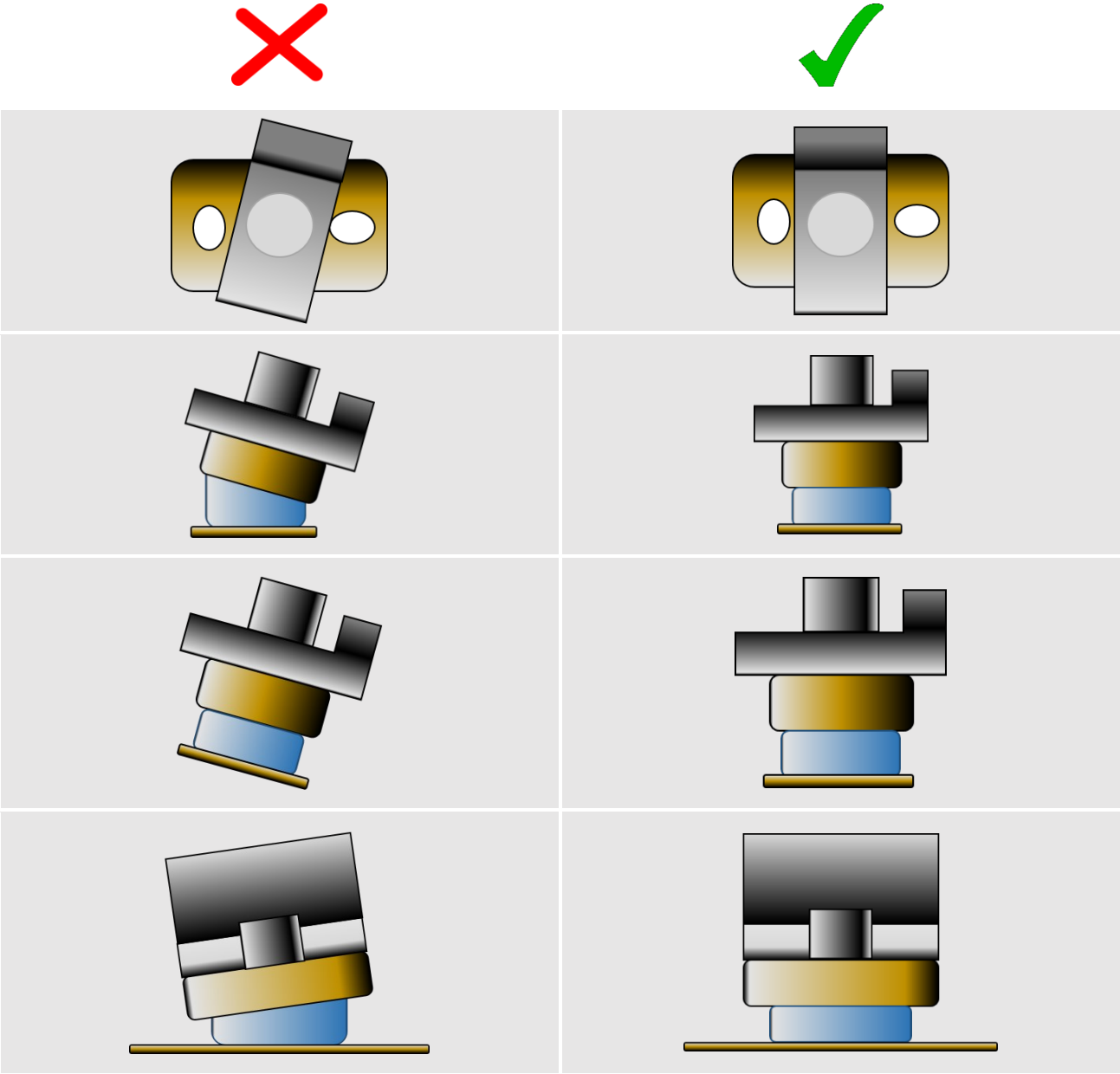

Figure 10: Correct Anti-Vibration Mount Installation

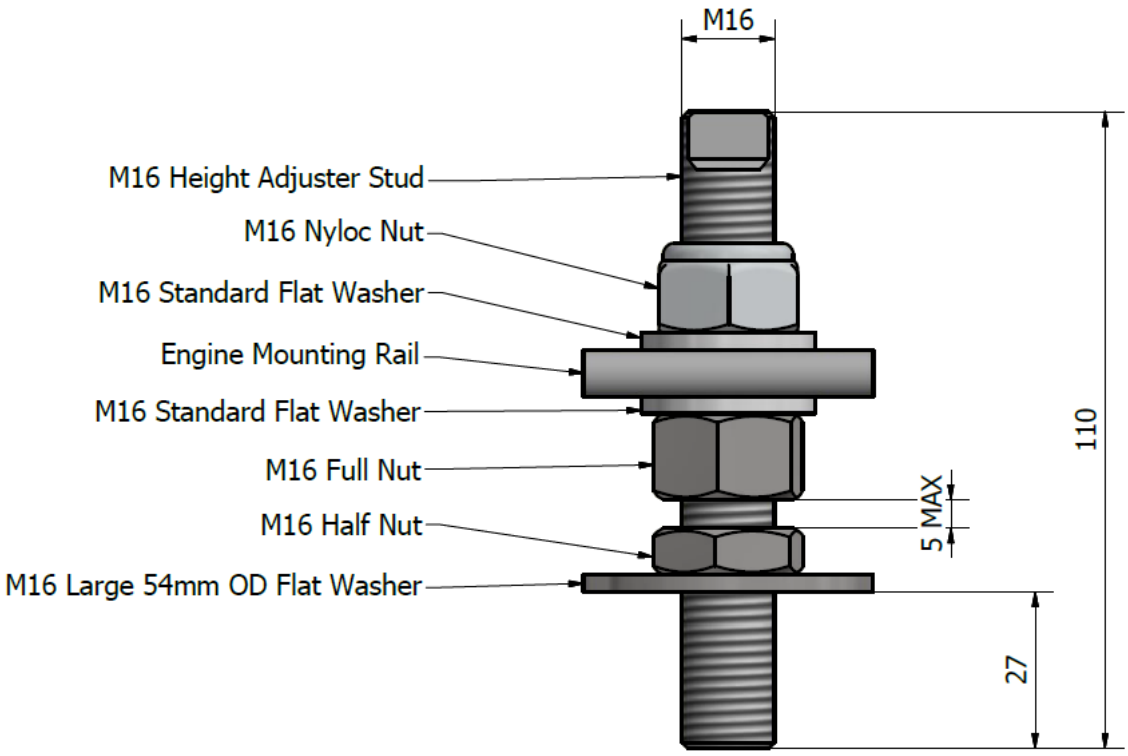

Figure 11: Correct Anti-Vibration Mount Installation

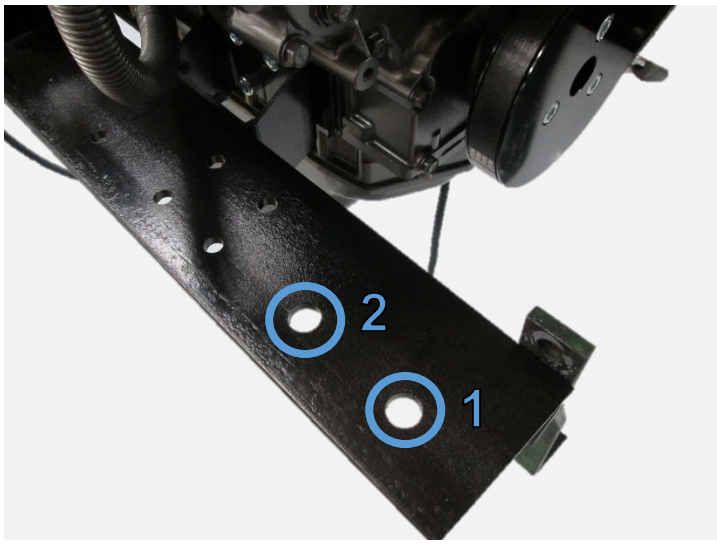

	Description
1	Normal mounting position
2	Alternative mounting position if engine compartment space is restricted

Figure 12: Anti-Vibration Mount Installation Points

6. Engine Alignment

- The gearbox output shaft flange and propeller shaft input flange must be almost perfectly aligned. A maximum of 0.05mm (0.002”) misalignment in any plane is acceptable. Ensure alignment is recheck after the first 4 hours of running, after the first month and thereafter annually.
- If the engine is out of alignment it will result in excessive vibration and possible damage to the stern tube and propeller shaft.
- Boats that are fitted with fully flexible drive couplings should still have the engine and shaft alignment as close as possible. A dummy shaft may be required for this purpose.

Some types of flexible shaft couplings require the input and output to be misaligned, check with the coupling manufacturer’s installation instructions.

- Minimum clearance of 25mm between rails and engine beds.

7. Engine Inclination

- The engine installation angle is the angle of the crankshaft centre to the water line (**Figure 13**).
- The propulsion efficiency decreases as the engine installation angle increases.
- The **maximum** engine installation angle is 15°

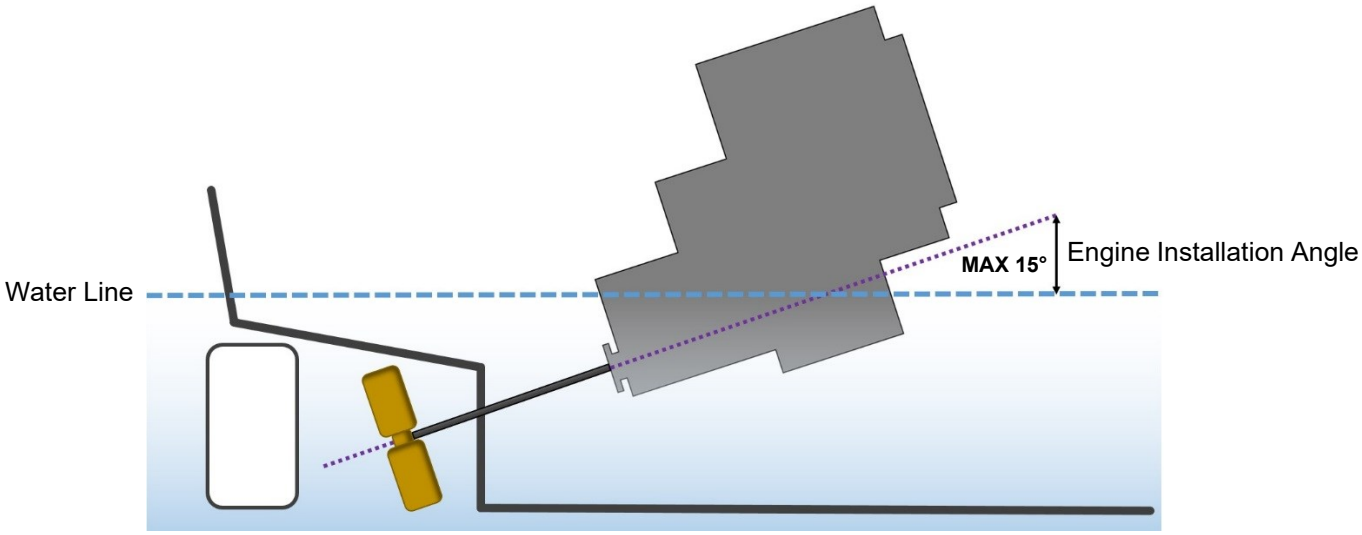

Figure 13: Maximum Engine Installation Angle

8. Electrics

CAUTION

- Do not attach any part, hose or cable to the engine wiring harness. There is a warning label attached to the harness to remind you of this.
- Connect the wiring extension harness multi plug to the panel plug and the other end to the engine.
- Connect the start battery positive cable to the starter motor solenoid terminal.
- The starter motor battery cable must have a cross sectional area of at least 50mm^2.
- The engines are fitted with a single 50A alternator as standard.
- A single 70A Alternator can be fitted in place of the 50A Alternator as an option.
- There is a further option to have two separate alternators fitted to the engine. The standard 50A alternator and either an additional 12V 150A alternator or 240A alternator can be fitted. This option is used to charge the batteries for the domestic electrical system.
- For twin alternator engines, connect the domestic battery positive cable to the 150A or 240A Alternator. The 150A alternator has a B+ terminal and the 240A alternator has a “pos out” terminal (see wiring diagram). This ensures that the 50A alternator charges the start battery and the 150A or 240A alternator charges the domestic battery. This removes the requirement for a split charging system or relay.
- The engine is supplied with the domestic alternator belt not fitted. This is so that domestic alternator damage does not occur if the engine is run without the domestic battery back connected. The belt should only be fitted when the domestic battery bank has been connected to the domestic alternator. Belt fitting and tensioning instructions are in **Section 7 – Service Procedure**. Make sure the alignment is correct.
- A cable will need to be manufactured locally and fitted between either the lower 12V 125A, 12V 150A, 12V 240A or 24V 120A alternator and domestic battery positive terminal. The cable should have a minimum cross-sectional area of:

	Cross Sectional Area
Shire 40	40mm²
Shire 50	70mm²
24v 120amp Alternator	40mm²

- Both negative battery terminals can be connected to a common earth point.

Note: The 240A alternator is of the insulated earth design and requires a heavy-duty earth cable installed at all times.
Note: If an optional larger output alternator is fitted to either a new engine, or fitted to an old engine as an upgrade, ensure that all cables, master switches, terminals, split charge relays etc. are of sufficient capacity for the increased current.

9. Electrical Options

DANGER:
ELECTRIC SHOCK RISK!

- If the engine is fitted with the optional 230V 'E' Kit System, refer to the manual supplied with it for correct wiring, control box installation and operation.
- The Shire range can be supplied with other optional additional 12V or 24V or 48V alternators. This will be supplied fitted but not wired. It is the responsibility of the boat builder to ensure that this is correctly wired to the boats electrical system.

10. Engine Oil

WARNING:
BURN HAZARD! WAIT UNTIL THE ENGINE COOLS BEFORE YOU DRAIN THE ENGINE OIL. HOT ENGINE OIL MAY SPLASH AND BURN YOU.

NOTICE:
ENGINE OIL WITH A HIGHER API CLASS THAN CD IS UNSUITABLE FOR CANAL BOAT OPERATION AND WILL CAUSE ENGINE DAMAGE IF USED.

- All Shire engines are supplied fully run in.
- Check oil levels in engine and gearbox before starting
- Use good quality engine oil SAE 10W / 40 API class CD.

11. Fuel

WARNING:

DIESEL FUEL IS FLAMMABLE AND EXPLOSIVE UNDER CERTAIN CONDITIONS.

WARNING:

DIESEL FUEL IS HARMFUL TO SKIN. MAKE SURE THE RELEVANT PERSONAL PROTECTION EQUIPMENT IS WORN.

- Ensure the main fuel tank is clear of dirt and water.
- A separate water trap must be fitted to all engine installations. The Shire 40 and 50 engines are supplied with an additional fuel pre-filter water trap as standard.
- Connect fuel feed return hoses from engine to main supply and return lines to main fuel tank, ensuring they are connected the correct way around. The hose to the electric fuel pump is the inlet.
- The engine hoses are supplied with 8mm (5/16”) OD metal hosetails and should be securely fitted to the main supply and return pipes with compression fittings.
- The engine hoses should have sufficient slack to absorb engine movement without placing strain on the hoses and be securely clipped to prevent accidental damage and chafing.
- Initially fill the fuel system by turning the ignition on to operate the electric fuel pump. Loosen the bleed screw on the top of the primary fuel filter / water trap and close when fuel begins to flow clearly (no bubbles). The rest of the process is done automatically by the engine. It is rarely necessary to bleed the injection pump or injectors upon installation as the engine will already have fuel in it from the engine run in and test procedure.

NOTICE:

THE PART CIRCLED IN Figure 14 IS NOT A BLEED SCREW. ATTEMPTS TO UNDO OR REMOVE IT WILL CAUSE DAMAGE TO THE PART.

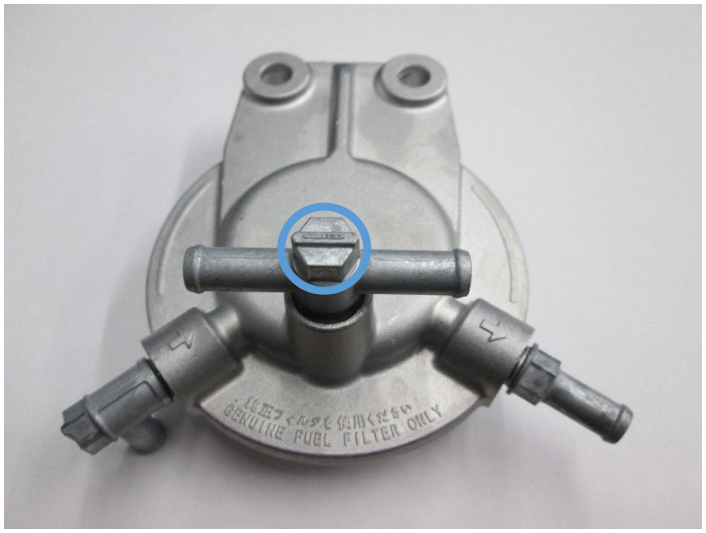

Figure 14: Secondary Fuel Filter Head (129004-55612-9)

12. Coolant

WARNING:

SCALD HAZARD! NEVER REMOVE THE COOLANT BOTTLE CAP IF THE ENGINE IS HOT. STEAM AND HOT COOLANT WILL SPURT OUT AND CAUSE INJURY. TIGHTEN THE CAP SECURELY AFTER BEING REMOVED. STEAM CAN SPURT OUT DURING ENGINE OPERATION IF THE CAP IS LOOSE.

WARNING:

BURN HAZARD! WAIT UNTIL THE ENGINE COOLS BEFORE YOU DRAIN THE ENGINE COOLANT. HOT ENGINE COOLANT MAY SPLASH AND BURN YOU.

WARNING:

BURN HAZARD! THE WATER COOLED EXHAUST MANIFOLD IS HOT AND MAY BURN YOU.

- Prepare coolant mix of 50% clean tap water and 50% antifreeze.

For Workboats:

- Ensure the top header tank connection goes to the small hole connection on the tank.
- To fill the engine cooling system for the first time:
  - For the Shire 40 Work Boat fill the system through the header tank filler cap.
  - For the Shire 50 Work Boat fill the system through the exhaust manifold filler cap and then through the header tank. Note: The water-cooled exhaust manifold is an option for the Shire 40WB.

After running the engine for the first time, stop the engine and monitor the water level frequently as trapped air bubbles may be expelled. Top up the system as necessary.

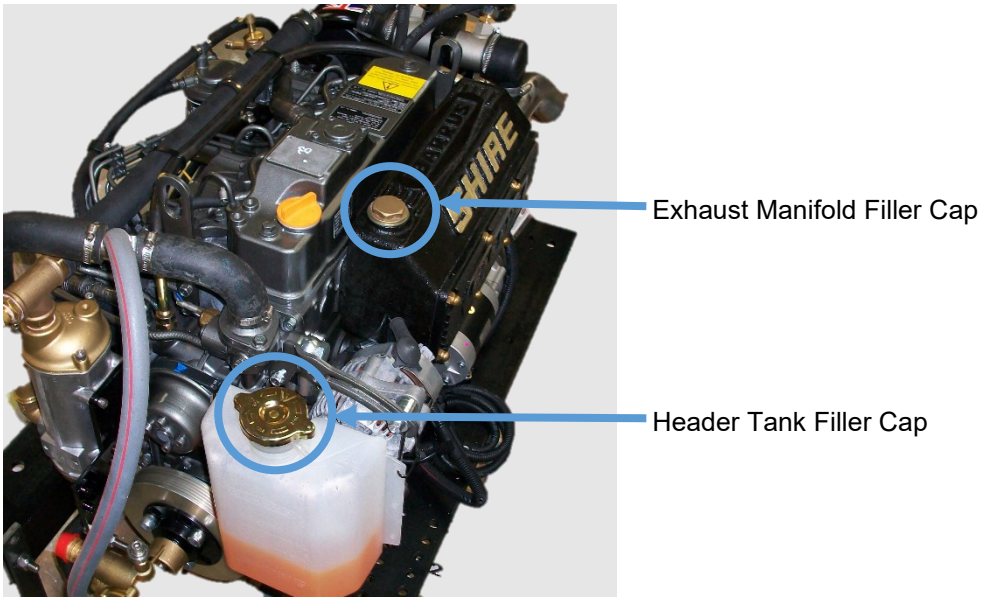

Figure 15: Shire 50 Coolant Filling Points

13. Control Cables

- Connect engine speed control cable. With the engine off, ensure that the engine speed control lever achieves full travel from idle to full speed. Adjust if necessary.
- Check the gearbox shift lever selects positively and that the drive direction corresponds with the gearshift control lever. Ensure that the gearbox control lever and the gearshift lever are both in neutral before connection. Adjust if necessary.

14. Domestic Battery Bank

DANGER: **EXPLOSION HAZARD!** NEVER SHORT OUT THE BATTERY TERMINALS, INCLUDING WHEN CHECKING THE REMAINING BATTERY CHARGE THIS WILL RESULT IN A SPARK AND MAY CAUSE AN EXPLOSION OR FIRE.
WARNING: **BURN HAZARD!** BATTERIES CONTAIN SULPHURIC ACID. NEVER ALLOW BATTERY FLUID TO COME IN CONTACT WITH SKIN, EYES OR CLOTHING. SEVERE BURNS COULD RESULT. MAKE SURE THE CORRECT PERSONAL PROTECTION EQUIPMENT IS WORN.

Domestic battery banks that are too large create excessive loads on the domestic alternator. Alternators running at maximum output for prolonged periods of time will eventually fail prematurely; alternators that fail due to the battery bank being over the maximum recommended size will not be covered by warranty.

Higher output additional alternators, or 'E' kits are available: if larger battery banks are required discuss your individual power requirements with the boat builder or engine supplier.

- The maximum domestic battery bank is calculated using the following:
  - Live aboard, three times domestic alternator, maximum output current.
  - Weekend cruising or hire fleet use, three and a half times domestic alternator, maximum output current.

Example 1: Live aboard application fitted with a 150amp domestic alternator

3 x 150 = 450 ampere/hour maximum battery bank size

Example 2: Weekend cruising or hire fleet application fitted with a 240amp domestic alternator

3.5 x 240 = 840 ampere/hour maximum battery bank size.

The standard alternators fitted to Shire engines are not suitable for charging lithium-ion batteries. If the standard alternators are used for charging lithium-ion batteries, they will not be covered under warranty. If lithium-ion batteries are to be used a specialist alternator will be required.

15. Control Panel

CAUTION

All Shire engines are supplied with an engine control panel that shows RPM and hours run and include warning lights and a warning buzzer. The deluxe panels also have additional gauges for the water temp, oil pressure and battery charging. The panels are designed to be splash proof and are correctly installed with the gauges vertical. Do not install so that they remain out in the open, or cover up when not on use.

The control panel engine tachometer is supplied already calibrated to measure correct engine speed. If a new control panel, tachometer or alternative alternator is fitted, the tacho will require re-calibrating.

Control Panel Calibration Procedure:

- Connect control panel plug to engine wiring loom plug.
- Turn ignition on (do not start engine).
- Press and hold black button on rear of tacho until “H-“appears on the digital display at the bottom of the tacho (on the front).
- When pressing and holding the black button on rear of tacho, the value displayed will increase / decrease until the button is released. Then when pressing again it will increase / decrease in the other direction. Keep doing this until the digitally displayed value on the bottom of tacho reaches the correct value, according to the type of alternator (see below table). This must be set to the alternator with blue and black wire connected to it.
- Confirm settings to tacho meter reader.
- An optical tachometer is required to check the reading.

Barrus Alternator (Amps)	Barrus Tacho reading
50	10.50 – 11.00
70	15.00
150	19.50 – 20.00
240	22.00

Alternative or non-standard alternators will require calibrating and checking by trial and error, with a handheld tacho until the engine speed and indicated tachometer speed are the same.

For the majority of the engines, the tacho is driven by the 50A alternator.

Engine energise to stop systems are available as an optional extra.

16. Exhaust System

WARNING:

EXHAUST HAZARD! NEVER OPERATE ENGINE WITHOUT PROPER VENTILATION. NEVER BLOCK VENTS OR OTHER MEANS OF VENTILATION. ALL COMBUSTION ENGINES CREATE CARBON MONOXIDE GAS DURING OPERATION. ACCUMULATION OF THIS GAS COULD CAUSE ILLNESS OR EVEN DEATH.

WARNING:

BURN HAZARD! THE EXHAUST MANIFOLD IS HOT AND MAY BURN YOU.

WARNING:

ENSURE EXHAUST SYSTEM HAS COOLED DOWN AND APPROPIATE PPE (GLOVES, MASK, SEALED GOGGLES) IS WORN WHEN WORKING ON THE EXHAUST SYSTEM.

If replacing Exhaust Manifold Blankets, ensure appropriate PPE is worn. Exhaust Blanket part numbers are available in the Part Manuals for the engine

Work Boat with Dry Exhaust:

The exhaust outlet size on the engine is 1½" BSP female. There must be a flexible exhaust hose of suitable exhaust grade between the engine and the silencer or hull outlet. The outlet must be a minimum of 300mm and above the waterline at all times. The exhaust fittings and silencer (if fitted) must not be smaller than 1½" BSP. Exhaust silencers, flexible exhaust hose connections and lagging blanket are all available as optional extras:

Part Description	Part Number
Exhaust Coupling 1½" x 1½" BSP	RDG1916
Exhaust Silencer DSA-38	RDG1911
Flexible Exhaust Hose (18")	RDG1879
Blanket 18" Flexy Exhaust	RDG2477
Hospital Silencer 1½" BSP	RDG6536
1 ½"F x 1 ½"F BSP 90 Elbow	RDG5898

Make sure the exhaust increases then decreases in height as shown in (**Figure 16**).

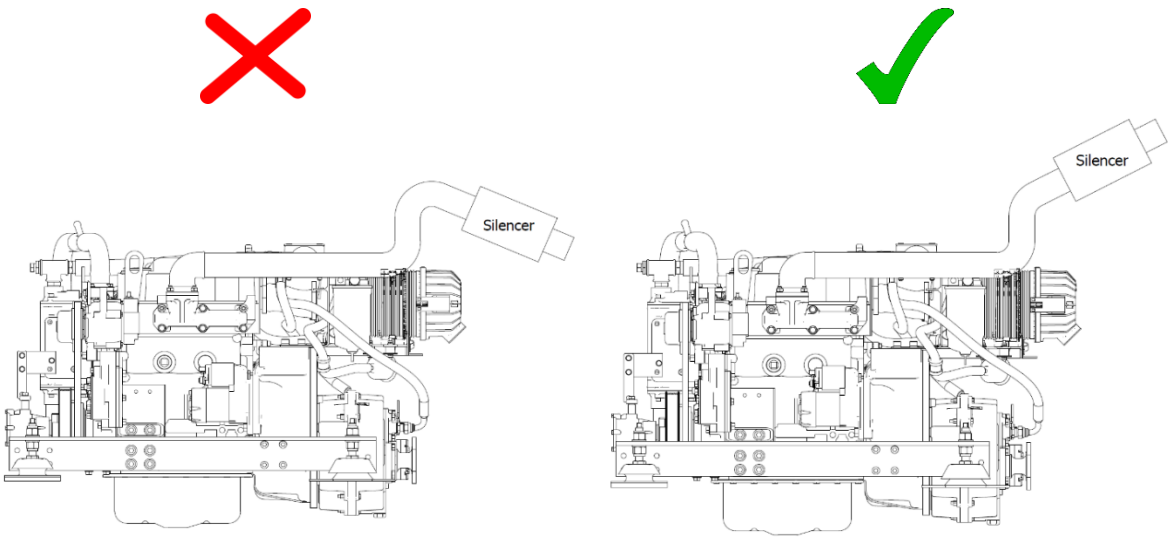

Figure 16: Correct Exhaust Installation

Work Boat with Water Injected Exhaust:

If the engine is installed low down in the boat, below the outside water level, a system such as a Lift Silencer with a siphon break system, must be used to prevent sea water from flowing back down the exhaust and into the engine.

Ideal internal exhaust hose diameter is 60mm ID on engines fitted with optional PRM 280 gearbox, or a minimum of 50mm (2”) on engines with a PRM150 gearbox.

The maximum engine exhaust back pressure is 12.75 kPa (1.85 psi) initially for the 4TNV88 block.

- **Lift Silencer**
  The correct installation of the lift silencer is vital to safety, and to avoid back flooding of the engine. **Figure 17** shows how to install the lift silencer correctly (Note: Halyard (M&I) Limited have given Barrus permission to use the diagram).

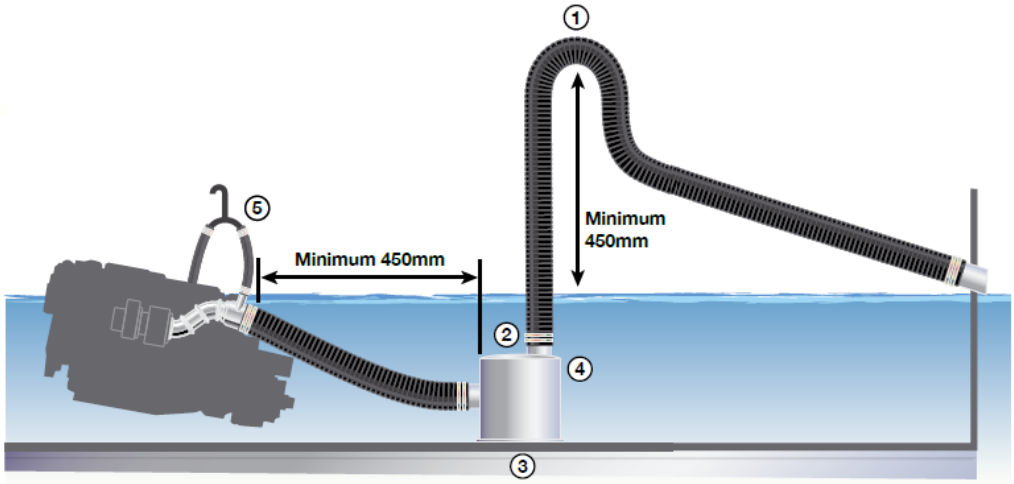

Figure 17: Correct Installation of the Lift Silencer

1. The swan neck must reach at least 450mm (18”) above the waterline, when installed on hull centreline.
2. The top of the silencer should be at least 300mm (12”) below the water injection point.
3. The silencer must be installed as near as possible to the centreline of the hull, particularly where severe angles of heel are expected. The swan neck must be 450mm above heeled water line.
4. Remember that 15% of the volume of the exhaust hose may be water. The size of the silencer selected must be such that water draining into it will fit it by no more than one third.
5. A siphon break must be used.

The silencer may only be used in a Water Injected marine exhaust system. The overall design of the system, and choice of components, will have a result on the back pressure in the exhaust which is vital to the performance and life of the engine. **Barrus recommend that Halyard (M&I) Limited are used for the Lift Silencer, Siphon Break and other components. Contact Halyard (M&I) Limited for further information.**
The silencer must be drained before the boat is craned or transported and during the winter.

There must be at least 450mm distance between the water injection point and the position of the silencer to allow adequate cooling of the exhaust gases. Maximum temperature during continuous operation of the silencer is limited to 85 degrees centigrade. Normally in a well-designed system, the temperature of the silencer should be between 50-70 degrees centigrade. Such operation will result in longer exhaust life.
Connections to the silencer should be made using suitable exhaust hose, which is type approved by Lloyds and DNV. Do not use oil or grease to lubricate hoses when installing, wetting the inside of the hoses with water will help them slip more easily over the silencer spigots. A minimum of 2 hose clips must be used. Securely tighten all hose clamps, but be careful not to overtighten.

The silencer should be positioned within 300mm of the centre line of the vessel, or to the engine on which it is installed. This is particularly important on sailing vessels where a substantial angle of heel can be encountered. On systems where the exhaust manifold is near or below the water line. A siphon break should be used to prevent the water flow continuing after the engine shut down.
In all installations the silencer should be at the lowest point if the entire exhaust system.

The top of the silencer should be at least below the exhaust manifold outlet for the best performance. If a distance less than is allowed, the margin of safety for preventing reverse flow of water toward the manifold will decrease.

- ***Siphon Breaker Fitting Instructions***
    1. The unit must be positioned upright, well above waterline. The height above waterline will vary from vessel to vessel but will be between 150mm and 2 metres. Please seek guidance on this if you are unsure, or if you are not familiar with the correct way to incorporate a siphon breaker into your particular exhaust system.

    2. The inverted "U" bend at the top must be connected to a hose draining into the bilge, or over the side of the vessel. In no circumstances must this drain into a sealed container, such as a bottle due to the risk of back siphoning. After fitting, run the engine and check the unions for leaks. Check again after 5 running hours.
    3. The siphon break is equally suitable for use with a marine toilet water inlet.
    4. The ½" unit may also be used with 5/8" systems. The 3/4" and 1" units may only be used with the correct hose.

- ***Siphon Breaker Maintenance***
    1. On commercial vessels achieving in excess of 150 engine hours per year, the unit should have the small valve removed from the top and this should be thoroughly washed in warm soapy water to remove salt encrustation.
    2. On a pleasure vessel this should be done twice a year.
    3. On reassembly the engine should be run and the unit checked for leaks. The hose junctions should also be checked for leaks as part of the daily inspection procedure for sea cocks, water pipes, oil levels, etc.

17. Seawater Strainer

- A bulkhead mounted seawater strainer or similar is **NOT** supplied with the engine. We recommend that one is fitted between the seawater inlet (seacock) and the sea water pump inlet.

18. Seawater Pump Hose Minimum Inlet Size

	Cross Sectional Area
Shire 40/50	25mm (1")

Note: A Suitable reinforced, non-collapsible hose must be used.

19. Hydraulic Drive Transmissions

If an engine is to have a hydraulic drive transmission attached to it instead of a conventional marine gearbox, a number of points must be observed:

- Bobtail engines (i.e. Engines supplied without a marine gearbox), normally do not have a gearbox oil cooler fitted however if a cooler is supplied, this will only be suitable to cool a conventional marine gearbox.
- Hydraulic drive transmissions generate far more heat than a conventional marine gearbox. Therefore the size of the oil cooler installed must be calculated by the hydraulic drive transmission supplier. This is to ensure it has sufficient cooling capacity and is sized appropriately taking into account:
  - Maximum engine power.
  - High ambient summer air temperature.
  - Summer River/Canal/Sea temperature.
  - No additional restriction to engine coolant flow is present.

Hydraulic oil coolers should be installed in the seawater cooling system after the engine and before the water cooled exhaust injection elbow. They must not be installed before the engine. Coolers that are installed before the engine will invalidate the engine warranty.

20. Hydraulic Pump Drive Option

For SAE pump (9T): If a hydraulic pump is required to drive items such as bow thrusters or hydraulic winches, then the following parts are required to enable drive to be taken from the engine Power Take Off:

Part Number 129484-26200 incorporates:

- Packing (on gear case side): 171353-26081
- Cover: 121023-26070
- Cover packing: 121023-26061

Ratio: 0.90:1

21. Calorifiers

- These are not fitted as standard but are available as an option.
- If calorifiers are fitted the following instructions must be complied with:

The temperature of coolant flowing to the calorifier from the engine can be between 85 and 90°C. A blender valve must be incorporated in the calorifier / hot water system outlet to lower the hot water temperature for domestic use.

22. Control Cables

- Connect engine speed control cable. With the engine off, ensure that the engine speed control lever achieves full travel from idle to full speed. Adjust if necessary.
- Check the gearbox shift lever selects positively and that the drive direction corresponds with the gearshift control lever. Ensure that the gearbox control lever and the gearshift lever are both in neutral before connection. Adjust if necessary.

23. Front Power Take Stub Shaft Option

If a front power take stub shaft is required, the part number RDG912A9 can be ordered as an option. If a different size of stub shaft is required contact Barrus as other sizes are available.

The stub shaft is 95mm in length with a 32mm diameter. The key way slot is 10mm wide with a 5mm depth.

24. PRM 280DP Gearbox with Power Take Off (Option)

The PRM 280 with power take off is designed for driving hydraulic pumps made to SAEJ77 Series B specification. The maximum power which can be transmitted is 22kW (29.5hp) per 1000rpm.

The power take off operates in the opposite direction to the gearbox input shaft. The output of the live power take off is the same speed as the engine.

25. Engine Start Battery

For the required specification of the Engine Start Battery please refer to **Section 10 – Technical Data.**

26. Additional Wiring Connection

An additional grey wire tag is fitted which is found coming out of the loom near the relay. This is live only when the ignition is energised and can be used to trigger a circuit that may be required to operate only when the engine is running such as a bow thruster, calorifier / heating system circulation pump, engine cover microswitch operated magnet, etc. This wire is labelled on the wiring loom diagram as “Not Connected”.

Note, this wire should only be used to operate an electrical relay in conjunction with a separate fused supply.

27. Installation Check List

	Please tick box ✔
Engine alignment correct, clearance all round, check propeller turns by hand (Ensure ignition is off battery and battery master switch is off)	
Anti-Vibration mounts correct height, spacers if necessary. Make sure all nuts are tight	
Exhaust system as specified	
Check the correct size of start battery has been fitted	
Battery leads are of correct size, tightened and start battery is charged	
Check tension of alternator belts, wiring connected and belt alignment checked if removed	
Check fuel system is connected correctly and primed	
Fuel line water trap installed and water drained off	
Check header tank connections are correct way round, constant pipework rise to header tank	
Check level of coolant in header tank or manifold and correct ratio of antifreeze to water	
All air has been bled from skin tank, calorifier and pipework (If applicable)	
Engine and gearbox oil levels are as specified	
Throttle and gear cables correctly adjusted and operating smoothly	
All pipework and cabling supported and not chaffing, slack to allow movement of engine	
Engine control panel installed in a position where it is not out in the open	
Confirm engine control panel, gauges and warning lights are all operational	
Suitable specification of hose between seacock and seawater pump with no restrictions is fitted	
Run the engine for 20 minutes with the boat tied up and in gear (at ½ speed). Check for leaks and that all systems operate correctly	
Check & Set the Engine Idle Speed to 850-875 rpm	
Check for leaks	
Explain/Demonstrate daily/weekly/periodic maintenance checks	
Explain/Demonstrate off season storage and maintenance	
'E' Kit 230v AC systems installed by qualified electrician and to BMEA code of practice for Electrical and Electronic installation in Boats: BS EN ISO 13297 (ac)	
Installer's signature	
Installer name/company	

SECTION 6 – Operation

NOTICE:

REFER TO THE YANMAR MANUAL PRIOR TO STARTING THE ENGINE.

1. Starting the engine for the first time

- Remove ignition key.
- Ensure all oil and coolant levels are checked.
- Ensure both the engine and domestic batteries are connected. Both battery master switches must be turned on. Failure to do so may damage the domestic alternator.
- Ensure that the raw water seacock is turned on.

2. Starting Procedure

- Ensure there is no one in the engine compartment.
- Ensure the engine compartment door is closed.
- Ensure the gearshift control level is set to neutral and that all persons are clear of any moving parts.
- Insert ignition key.
- Turn key to on position. The glow plug light will illuminate.
- Observe warning lights (and gauges on deluxe panel). Note: The engine water temperature overheat warning light will only come on for a brief period of time when the ignition is first turned on as a bulb check. It will then only illuminate in the case of the engine coolant temperature exceeding the maximum safety level.
- Wait for the glow plug warning light to go out.
- Turn key to start and hold to crank.
- Crank the engine for no more than 15 seconds.
- Upon engine start, immediately release the key.
- Key will return to on position.
- The warning buzzer will stop and on the deluxe panel, the oil pressure gauge will show an oil pressure of 3.5 - 4.5 bar (51 – 61 psi).
- Should any warning light not go out, or if there is no reading on the oil pressure gauge, the buzzer will continue sounding. In this case, stop the engine immediately and check the relevant system (Note: If the charge light does not go out, briefly increase the engine speed).
- Once started check that sea water is coming out of the water cooled exhaust outlet in the hull of the boat.

- Stop engine if any abnormal noises are detected.
- Visually check the engine for oil, fuel and coolant leaks, after initial start-up and at regular intervals. Note: Engine must be stopped, with ignition key removed, to carry out this check).

3. Stopping Procedure

- Move speed control lever to idle position.
- Turn key to off position.

4. Full Load Running

- Running diesel engines near their rated output (maximum load) regularly will disperse accumulated carbon and condensation, enhancing engine life and reducing emissions.
- Running the engine at, or near maximum speed whilst in gear may not be possible on inland waterways with speed limits in place. If this is possible, ensure that the water is deep enough not to damage the propeller. It is recommended that the engine is run at or near full load for 15 minutes (maximum revs, in gear) every 50 hours.

5. Refuelling

WARNING:

DIESEL FUEL IS FLAMMABLE AND EXPLOSIVE UNDER CERTAIN CONDITIONS.

WARNING:

DIESEL FUEL IS HARMFUL TO SKIN. MAKE SURE THE RELEVANT PERSONAL PROTECTION EQUIPMENT IS WORN.

- All Shire boat engines run on diesel fuel.
- Please note that when the vessel is to be left for any period of time, the fuel tank should be left full to eliminate the build-up of condensation and formation of water in the fuel tank.
- Engine to be turned off while refuelling.
- The use of renewable and alternative fuels that comply with the EN15940 standard is permitted.
- This refers to GTL (Gas to Liquid), BTL (Biomass to Liquid) and HVO (Hydrotreated Vegetable Oil) fuels.

- If an alternative fuel that does not comply with EN15940 is used, problems such as seizure of the fuel injection pump may occur due to deterioration of fuel lubricity. This will NOT be covered by warranty.
- Alternative fuels that comply with EN15940 have lower density and lower calorific values per unit capacity than those of ordinary diesel fuels, thus it is expected that the engine output will decrease.

6. Diesel Fuel Additive

The use of diesel fuel additive is recommended on Shire engines. The quality of the fuel available when cruising is often unknown. Also, the fuel may have been in storage for long periods of time. The use of additives will ensure that your engine fuel injection system is in top condition which should result in many years of smooth reliable operation, without the cost and inconvenience of expensive breakdowns due to poor quality fuel. It has also been found that improvements in fuel consumption and start ability are an added benefit of using this product. Diesel fuel additive is available from your Shire dealer in a handy 500ml container, Part Number RDG80210219.

7. Exhaust Back Pressure (Work Boat with dry exhaust)

- The engine exhaust outlet must be at least 300mm (12”) above the outside seawater level of the hull. If not an exhaust high rise kit and/or lock box/swan neck must be used to prevent sea water flowing back up the exhaust and causing engine damage.

The back pressure falls within the manufacturers recommended range when using the optional exhaust system (see **19. Exhaust System** from **Section 5 – Installation**) with the engine.

8. Single Shift Control Lever Side Mount Operation - Optional (RDG9210055)

To engage forward or reverse gear:

- Lift the safety latch under the handle before shifting.

To rev the engine in neutral:

- Pull the lever out sideways from the main body.
- Lift the safety latch under the handle then shift.

SECTION 7 – Service Procedure

NOTICE:

REFER TO THE YANMAR MANUAL PRIOR TO CARRYING OUT ANY SERVICE OR MAINTENANCE WORK.

WARNING:

PRIOR TO CARRYING OUT ANY SERVICE OR MAINTENANCE WORK MAKE SURE THE RELEVANT PERSONAL PROTECTION EQUIPMENT IS WORN.

1. Engine Oil and Filter Change

WARNING:

BURN HAZARD! WAIT UNTIL THE ENGINE COOLS SLIGHTLY BEFORE YOU DRAIN THE ENGINE OIL. HOT ENGINE OIL MAY SPLASH AND BURN YOU.

- Change the engine oil while the engine is still warm.
- Remove the blanking plug in the sump pump spout (6mm Allen key). Note: Shire 50 has two oil drain pumps, it is the pump mounted up higher on the engine.
- Place a plastic tube over the spout and into a container. Operate the pump handle to empty the sump. Note: Remember to refit the blanking plug afterwards.
- Place a drip tray under the engine to catch the small amount of oil that will escape from the oil filter. Using the strap type oil filter removal tool supplied with the engine, slacken the filter from the engine block in an anti-clockwise direction. Remove the tool and spin off the filter.
- Lightly oil the new filter O ring seal and install the filter onto the engine. Spin it on in a clockwise direction and finally tighten by hand only as firmly as you can.
- Refill the sump using the yellow oil filler cap in the rocker cover on top of the engine.
- Oil level should be to the top mark on the dipstick.
- Run the engine for 5 minutes before checking the oil level with the dipstick and top up if required.
- Do not exceed the maximum oil level marker as this may cause damage to the internal components of the engine.

2. Air Filter Check and Change

- Release the two spring clips. Pull off the end cover to reveal the filter element. The element simply pulls out.
- To fit the new element, slide the open end of the filter element into the main body. Gently push the element until fully seated. Refit the end cover.
- The air filter is constructed from pleated paper. Inspect it closely for dust or dirt. The air filter cannot be cleaned and must be replaced when dirty. The engine requires clean unrestricted air to run efficiently. Failure to maintain the air filter could result in smoke, increased fuel consumption and ultimately engine damage.

3. Gearbox Oil Change

WARNING:

BURN HAZARD! WAIT UNTIL THE GEARBOX COOLS SLIGHTLY BEFORE YOU DRAIN THE GEARBOX OIL. HOT OIL MAY SPLASH AND BURN YOU.

Some engines will have a gearbox sump pump fitted. To change the oil in this circumstance, follow the same procedures as were outlined for changing the engine oil. For engines without a gearbox sump pump follow the procedure below.

- Change the gearbox oil while it is still warm (Please refer to the gearbox manual for more information).
- Place a tray beneath the gearbox that will hold at least 2 litres.
- Remove the drain plug and allow 5 minutes for the oil to drain thoroughly.
- Replace the drain plug. Ensure that the sealing washer (if used) is still in place and in good condition before tightening. Fit a new washer if required.
- Refill the gearbox with oil to the upper mark on the dipstick. Screw the dipstick in fully, to establish level. Refer to the PRM owner manual for more details. **Section 6** in this manual contains details of oil specifications.
- Do not overfill the gearbox as this can damage the internal components.

Gearbox Model	Location of Dipstick / Filler Plug / Drain Plug
PRM 90 / 120	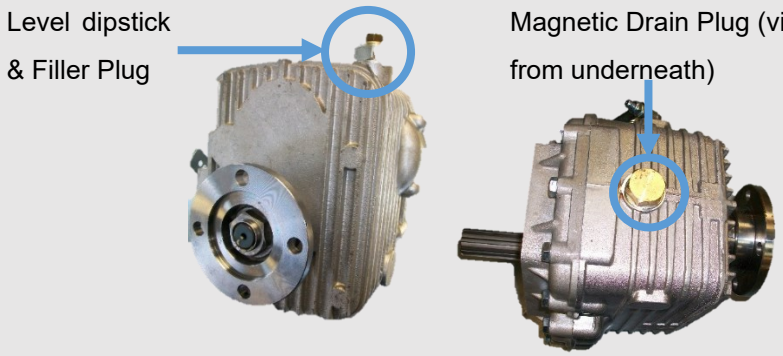
PRM 150	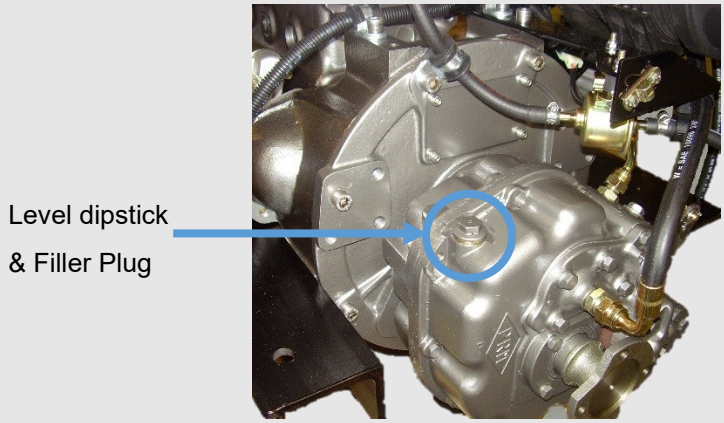
PRM 280	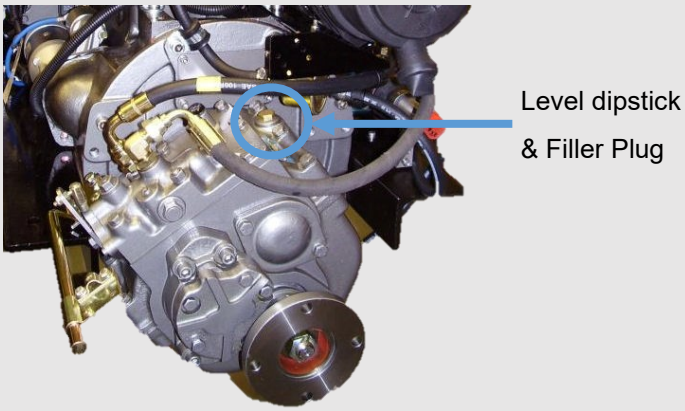

Figure 18: Location of Dipstick / Filler Plug / Drain Plug on Gearbox

4. Disposal of Oil and Related Items

NOTICE:

ALWAYS BE ENVIRONMENTALLY RESPONSIBLE.

- Please dispose of used oil and oil filters safely with due regard for the environment and take to your local waste oil disposal point.
- Do not allow oil or contaminated parts to enter the inland water way system.

5. Primary Fuel Filter Drain

WARNING:

DIESEL FUEL IS FLAMMABLE AND EXPLOSIVE UNDER CERTAIN CONDITIONS.

WARNING:

DIESEL FUEL IS HARMFUL TO SKIN. MAKE SURE THE RELEVANT PERSONAL PROTECTION EQUIPMENT IS WORN.

- Place a small drain bowl under the primary fuel filter / water trap.
- Loosen the drain screw located in the bottom of the fuel filter / water trap (**Figure 19**)
- Drain off any water.
- Once the water has been drained, retighten the drain screw.
- It is unlikely the complete fuel system will require bleeding.
- Run for 5 minutes.
- Check that the drain union is tight and that there are no leaks.
- Do not over tighten the drain screw.

The boat builder should have fitted an additional water trap in the fuel system. Ensure that this is drained regularly.

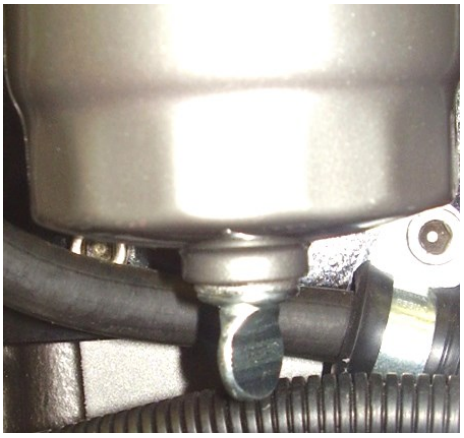

Figure 19: Primary Fuel Filter Drain Screw

6. Primary and Secondary Fuel Filter Change

DANGER:

DIESEL FUEL IS FLAMMABLE AND EXPLOSIVE UNDER CERTAIN CONDITIONS.

WARNING:

DIESEL FUEL IS HARMFUL TO SKIN. MAKE SURE THE RELEVANT PERSONAL PROTECTION EQUIPMENT IS WORN.

- Ensure the fuel tank is at least ¾ full prior to undertaking this procedure.
- Turn off the main boat fuel supply tap. This is located on or near the fuel tank.
- Place a small drip tray under the filter body.
- Remove the fuel filters using the filter strap wrench supplied. Unscrew them until loose then remove by hand.
- Primary fuel filter only: Retain the metal fuel filter drain screw from the old filter and reuse in the new filter. The part number for the drain screw is RDG9189022.
- Smear a small amount of clean fuel on all of the O ring seals that are supplied with the new filter element.
- Screw the new element back into the filter head. Tighten by hand only.
- Turn the main boat fuel supply tap back on.
- Ensure the system is correctly bled before attempting to start up.

The same procedure is used for both the primary and secondary fuel filter changes.

7. Fuel System Bleeding

DANGER:

DIESEL FUEL IS FLAMMABLE AND EXPLOSIVE UNDER CERTAIN CONDITIONS.

WARNING:

DIESEL FUEL IS HARMFUL TO SKIN. MAKE SURE THE RELEVANT PERSONAL PROTECTION EQUIPMENT IS WORN.

- Ensure the fuel tank is at least ¾ full prior to undertaking this procedure.
- See the fuel paragraph in Section 3 of the Yanmar engine operation manual.

8. Cooling System

DANGER:

SCALD HAZARD! NEVER REMOVE THE COOLANT PRESSURE CAP IF THE ENGINE IS HOT. STEAM AND HOT COOLANT WILL SPURT OUT AND SERIOUSLY BURN YOU. TIGHTEN THE CAP SECURELY AFTER BEING REMOVED. STEAM CAN SPURT OUT DURING ENGINE OPERATION IF THE CAP IS LOOSE.

WARNING:

BURN HAZARD! WAIT UNTIL THE ENGINE COOLS BEFORE YOU DRAIN THE ENGINE COOLANT. HOT ENGINE COOLANT MAY SPLASH AND BURN YOU.

- To check the coolant level, ensure that the engine has been shut down for at least half an hour.
- The coolant level can be checked visually and should be between the two level marks formed on the front of the white plastic expansion tank.
- If required, top up the level with coolant (50% clean tap water and 50% ethylene glycol based anti-freeze) through the expansion tank filler cap.
- Do not use water only to top up as this weakens the coolant mix, reducing the level of frost protection and anti-corrosion protection of the coolant.

9. Belt Adjustment

WARNING:

SEVERE HAZARD! KEEP HANDS AND OTHER BODY PARTS AWAY FROM MOVING/ROTATING PARTS. WEAR TIGHT FITTING CLOTHING AND KEEP YOUR HAIR SHORT OR TIE BACK. REMOVE ALL JEWELLERY BEFORE COMMENCING WORK. CHECK BEFORE STARTING THE ENGINE THAT ANY TOOLS OR RAGS USED DURING MAINTENANCE HAVE BEEN REMOVED FROM THE AREA.

- Ensure the ignition key is removed before carrying out any adjustments.
- Turn the battery master switch to the off position before carrying out any adjustments.
- Depress the longest run of the drive belt to be checked. If the travel exceeds 15-20mm using hard finger pressure, the belt needs re-tensioning.
- Loosen the upper adjuster on the alternator. Loosen the lower mounting pivot nut and bolt. Pull out either using hand pressure or using the tensioning screw, depending on which alternator belt is to be tensioned.
- Pull the alternator away from the engine to tighten the belt.
- Hold the alternator in position and retighten all the bolts.

If the belts are over tightened, alternator bearing failure will occur.

10. Belt Maintenance

WARNING:

SEVERE HAZARD! KEEP HANDS AND OTHER BODY PARTS AWAY FROM MOVING/ROTATING PARTS. WEAR TIGHT FITTING CLOTHING AND KEEP YOUR HAIR SHORT OR TIE BACK. REMOVE ALL JEWELLERY BEFORE COMMENCING WORK. CHECK BEFORE STARTING THE ENGINE THAT ANY TOOLS OR RAGS USED DURING MAINTENANCE HAVE BEEN REMOVED FROM THE AREA.

- Ensure the ignition key is removed before carrying out any maintenance.
- Turn the battery master switch to the off position before carrying out any maintenance.

- Do not allow oil to contact the belt. Oil attacks the construction of the belt. This reduces the drive efficiency and will cause it to fail prematurely.
- Replace the belt if it cracks or splits and as the adjustment nears the limit of travel.

Some boat builders may remove one or more of the alternators during the installation of the engine. It is essential that when the alternators are refitted that the alignment is perfect or premature belt wear will occur.

11. Belt Replacement

WARNING:

SEVERE HAZARD! KEEP HANDS AND OTHER BODY PARTS AWAY FROM MOVING/ROTATING PARTS. WEAR TIGHT FITTING CLOTHING AND KEEP YOUR HAIR SHORT OR TIE BACK. REMOVE ALL JEWELLERY BEFORE COMMENCING WORK. CHECK BEFORE STARTING THE ENGINE THAT ANY TOOLS OR RAGS USED DURING MAINTENANCE HAVE BEEN REMOVED FROM THE AREA.

- Ensure the ignition key is removed before replacing any belts.
- Turn the battery master switch to the off position before replacing any belts.
- Ensure that you have the correct replacement belts before starting this procedure. Some engines may have been fitted with non-standard optional alternators which may not use the belt sizes listed. Make a note of these belt sizes upon delivery.
- Loosen the top adjuster bolts and the lower mounting pivot nut and bolt.
- Push the alternator towards the engine to loosen the belt.
- Remove the belt.
- Hold the belt in position over the top alternator pulley. Rotate the engine if required by hand, to guide the new belt into the “vee”.
- Replace the seawater pump (if required).
- Re-tension the belt as above.

12. Control Panel Maintenance

WARNING:

REMOVE THE IGNITION KEY BEFORE WORKING IN ENGINE COMPARTMENT.
TURN BATTERY ISOLATION SWITCHES OFF.

- **To replace an illumination bulb:** Release the panel from its mounting. The bulbs are accessible from the rear of the panel. Remove the wires, unscrew the nut and pull out the bulb housing from the panel. Remove the bulb and replace. Refit bulb housing, screw the nut back up and refit the wires.
- **To replace any gauge:** Release the panel from its mounting. The gauges are accessible from the rear of the panel. Unplug the wire connectors, unscrew and pull the gauge out of the panel. Replace the gauge and refit. Reattach the wiring connectors.

Periodically squirt a lubricant into the key switch slot when the key has been removed (see Section 8 – Service Schedule). A lubricant such as WD40 – with silicon, would be suitable. Other lubricants are available. Then with the battery master switch turned off, operate the key switch a couple of times. This will ensure the lubricant works into the mechanism.

13. Sacrificial Anode Change

- The anode is located in the “T” fitting on top of the engine at the front facing forward (**Figure 20**).

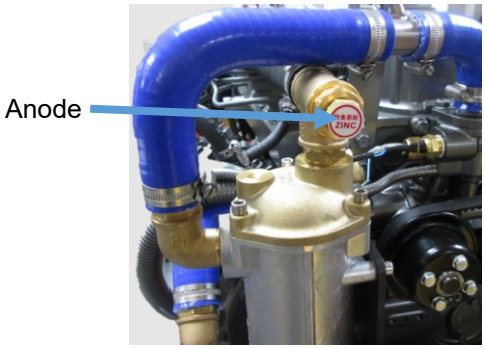

Figure 20: Work Boat Anode Location

14. Raw Water Pump Impellor Change

- The pump is located on the front of the engine. It is either fitted to the Power Take Off pulley camshaft drive or bolted to the front of the engine and driven by the crankshaft. Note: The crank driven pump is a standard item on engines fitted with the optional 150A or 240A Alternator. If the engine doesn’t use these alternators the crank driven pump is an optional extra.
- Remove the pump cover plate.
- Remove the pump impeller (special tools are available from chandleries to assist with this task).
- Note: Do not lever against the front of the pulley housing as it is easily damaged.
- Inspect the pump housing and front housing for damage or wear.
- Replace the impellor.
- Replace the cover plate gasket if damaged.
- Replace any other worn components as necessary.

15. Engine Heat Exchanger Tube Stack Flushing

- When the engine is cold, drain the water from the engine block. Remove the hose from the tap and drain.
- Drain water from the heat exchanger. The drain plug is in the bottom of the heat exchanger end cap.
- Disconnect the pipes and hoses from the engine heat exchanger.
- Remove the heat exchanger from the engine.
- Mark the position and remove the end caps from the heat exchanger.
- Carefully remove the tube stack from the centre of the heat exchanger.
- Fully flush between the tubes to remove any dirt of scum build up.
- Inspect the tube stack and replace if damaged.
- Reassemble and refit, checking the end cap “O” rings are in good condition.
- Ensure the end caps are fitted in the correct orientation. If they are not in the correct orientation, overheating will occur which will not be covered under the warranty.
- Refill the engine with coolant as described earlier.

16. Winterization of Seawater Cooling System

- To prevent frost damage to the seawater cooling circuit components due to water freezing, ensure all seawater or raw water is drained from the system.
- Alternatively, run neat antifreeze through the seawater pump inlet to protect the system.
- Ensure that the antifreeze is drained before starting the engine during the next season. This is to ensure that it does not get into the marine environment. Dispose of the antifreeze correctly.

SECTION 8 – Service Schedule

NOTICE:

REFER TO THE YANMAR MANUAL PRIOR TO CARRYING OUT ANY SERVICE OR MAINTENANCE WORK.

WARNING:

PRIOR TO CARRYING OUT ANY SERVICE OR MAINTENANCE WORK MAKE SURE THE RELEVANT PERSONAL PROTECTION EQUIPMENT IS WORN.

1. Specifications and Capacities

Specification of Coolants and Lubricants to use:

Component	Lubricant
Engine	SAE 10W 40 API Class CD Oil
Coolant	50% Clean Water + 50% Ethylene Glycol Antifreeze
PRM 90 and 120 Gearbox	ATF (Automatic Transmission Fluid) Oil
PRM 150 and 280 Gearbox	Engine Oil

Engine Oil Capacity (with Filter):

Engine	Capacity (Litres)	Capacity (Pints)
40 & 50	7.4	13

Gearbox Oil Capacity (Excluding Cooler):

Gearbox	Capacity (Litres)	Capacity (Pints)
PRM 90	0.57	1.0
PRM 120	0.8	1.4
PRM 150	1.4	2.5
PRM 280	1.5	2.7

2. Service Intervals

	Check	Change	Notes
Engine Oil & Filter	Daily (Level)	Every 350 Hours OR 12 Months*	First change after 50 hours
Gearbox Oil	Weekly (Level)	Every 350 Hours OR 12 Months*	First change after 25 hours
Coolant Level	Daily (Level)	Every 24 Months	-
Primary Fuel Filter **	50 Hours	At first 50 hour service and then every 350 hours OR 12 Months*	Drain water every 50 hours OR Monthly***
Engine Fuel Filter **	-	Every 700 Hours OR 12 Months*	If large quantities of dirt or water are found in the Primary Fuel Filter then change at 350 hours
Air Filter Element	175 Hours	Every 700 hours OR 24 Months*	Sooner if required
Drive Belts	Daily	As required	Adjust as necessary
All Hoses	50 Hours	As required	Check hoses for damage or leaks. Replace as necessary
Key Switch	Lubricate	Every 150 hours OR 12 Months*	As per instructions in Section 7 - Service Procedure
Sacrificial Anodes	250 Hours	Every 500 hours OR 12 Months*	Check and change more frequently if local conditions require it
Raw Water Pump Impeller	250 Hours	Every 500 hours OR 12 Months*	Change more frequently if operating in shallow or sandy waters
Main Heat Exchanger	500 Hours	-	Check and clean more frequently if local conditions require it

* Whichever occurs first.

** Only original filters which meet the Recreational Craft Directive/ Recreational Craft Regulation should be fitted to your engine.

*** If large quantities of water are found in the fuel when the filter is drained, increase the frequency of draining plus change fuel filters more regularly.

SECTION 9 – Wiring Diagrams

1. Engine Wiring Diagram Shire 40, & 50

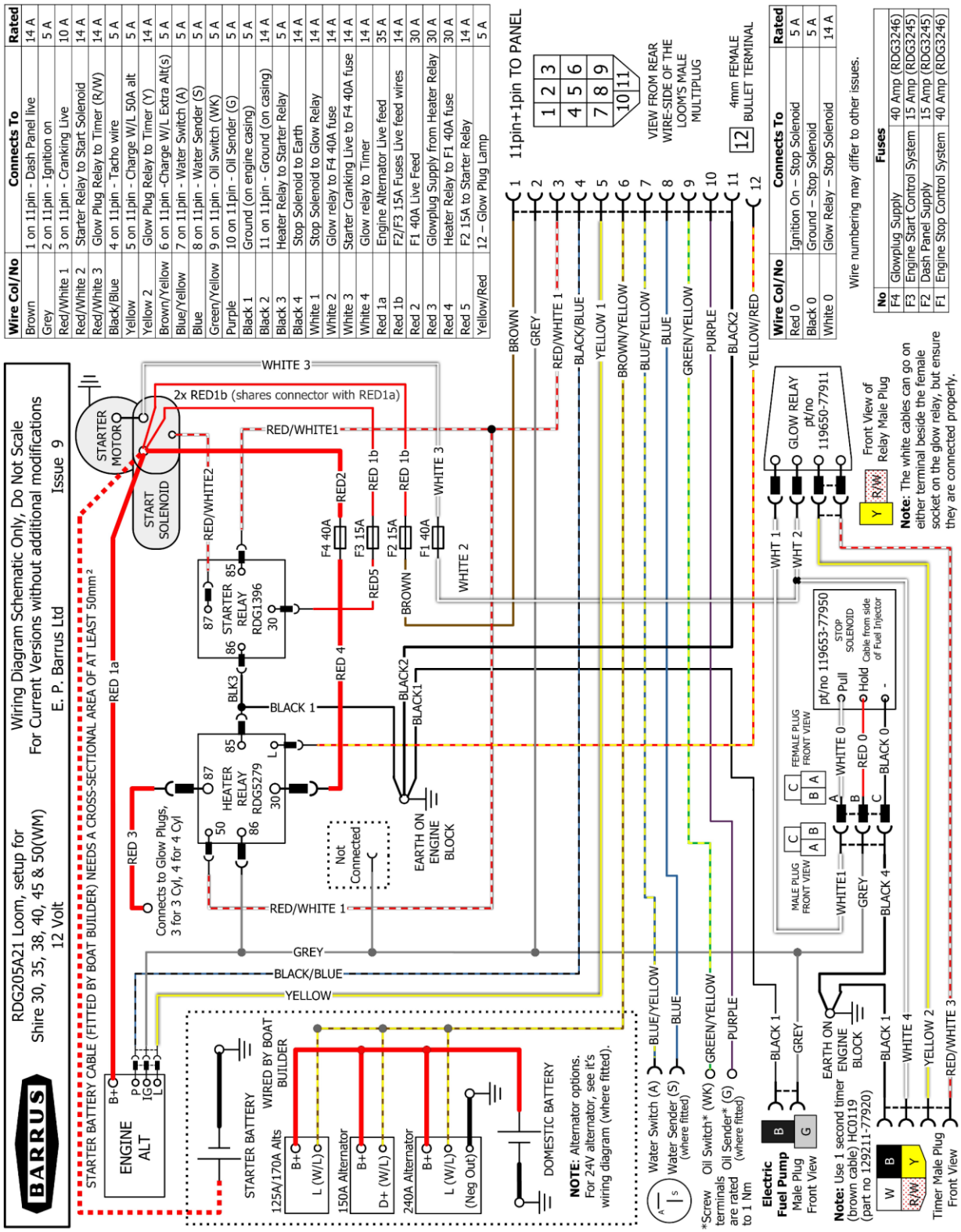

Figure 21: Shire 40 & 50 Wiring Diagram

2. Standard Control Panel Wiring Diagram

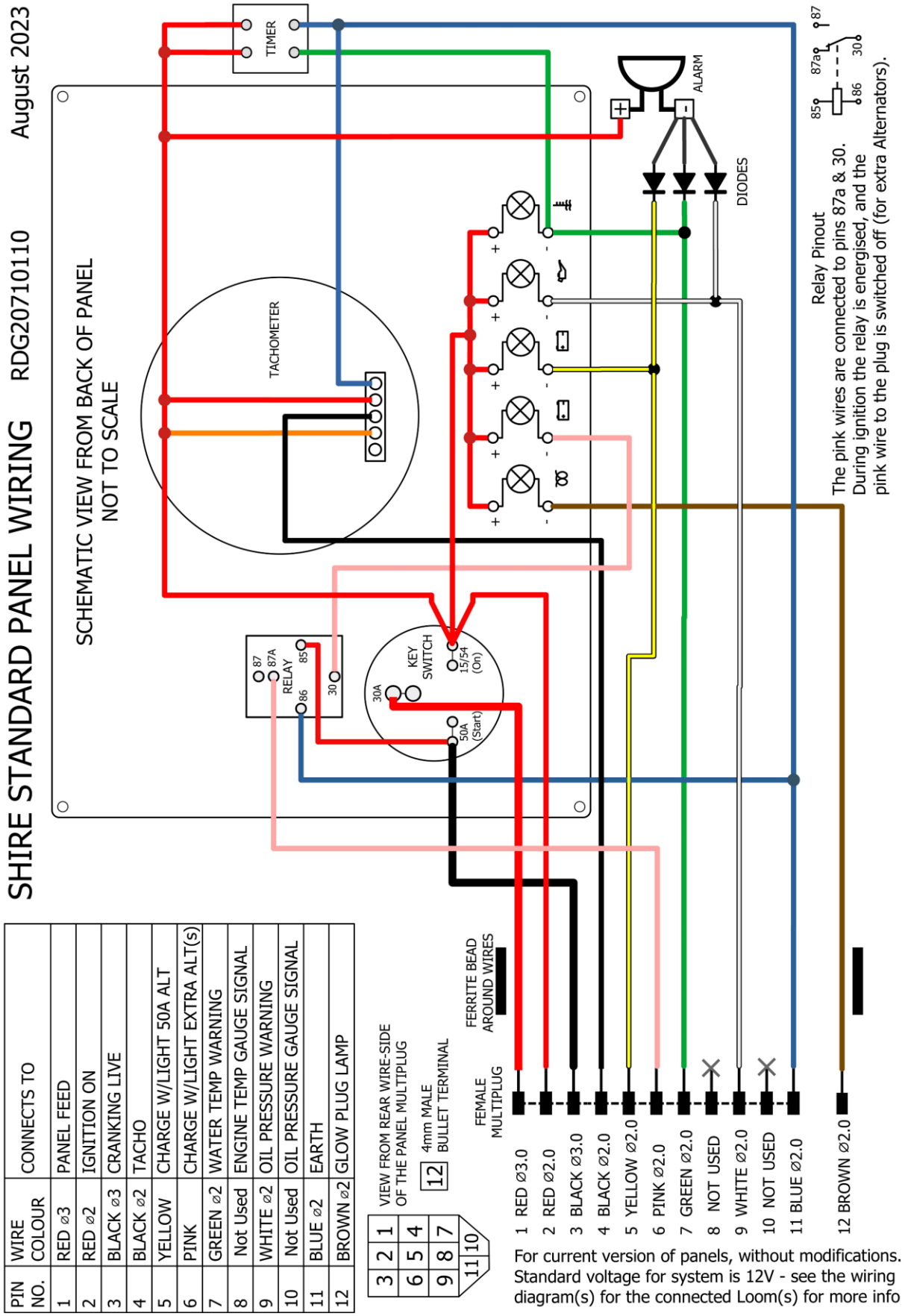

PIN NO.	WIRE COLOUR	CONNECTS TO
1	RED ø3	PANEL FEED
2	RED ø2	IGNITION ON
3	BLACK ø3	CRANKING LIVE
4	BLACK ø2	TACHO
5	YELLOW	CHARGE W/LIGHT 50A ALT
6	PINK	CHARGE W/LIGHT EXTRA ALT(s)
7	GREEN ø2	WATER TEMP WARNING
8	Not Used	ENGINE TEMP GAUGE SIGNAL
9	WHITE ø2	OIL PRESSURE WARNING
10	Not Used	OIL PRESSURE GAUGE SIGNAL
11	BLUE ø2	EARTH
12	BROWN ø2	GLOW PLUG LAMP

Figure 22: Standard Control Panel Wiring Diagram

3. Deluxe Control Panel Wiring Diagram

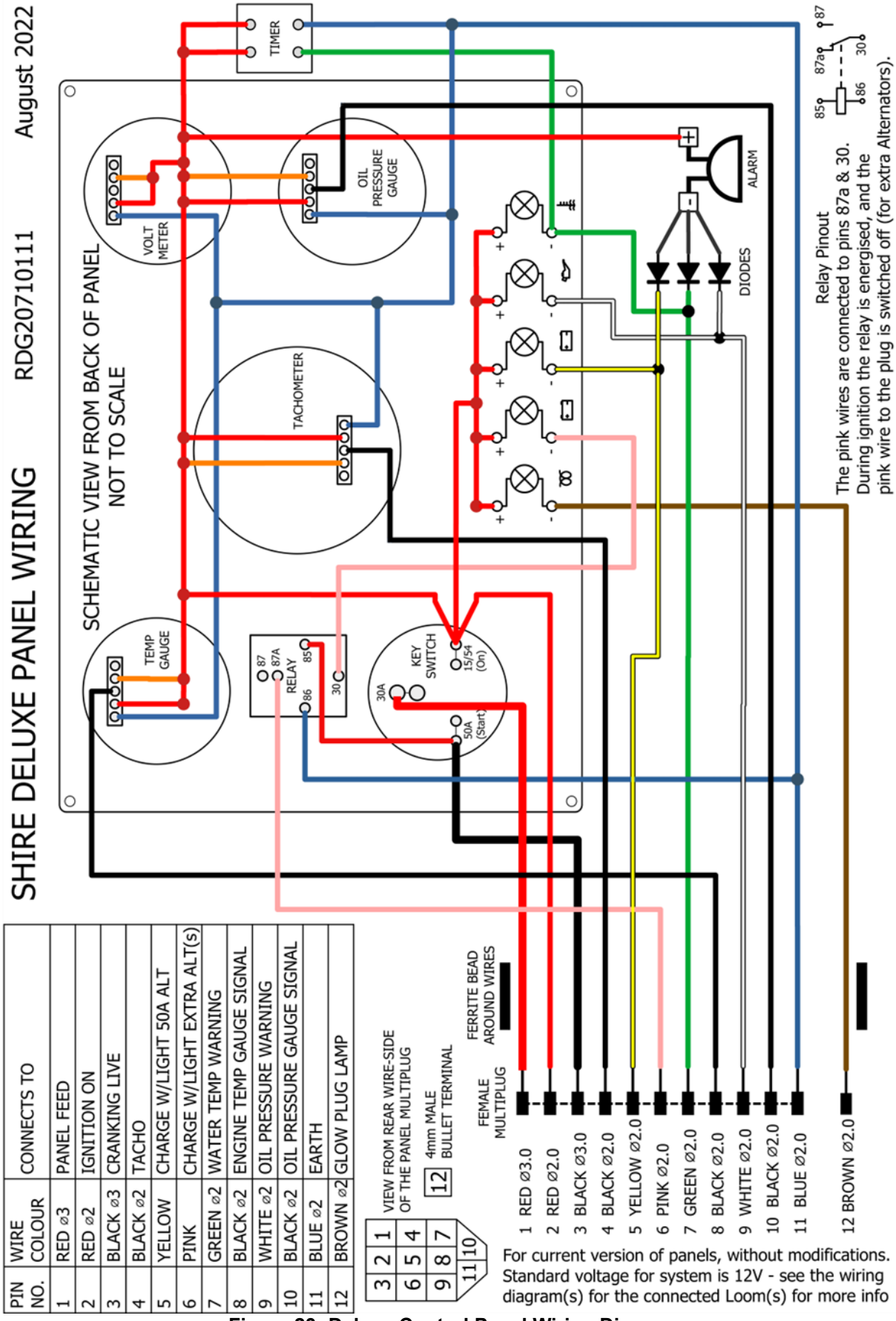

PIN NO.	WIRE COLOUR	CONNECTS TO
1	RED ø3	PANEL FEED
2	RED ø2	IGNITION ON
3	BLACK ø3	CRANKING LIVE
4	BLACK ø2	TACHO
5	YELLOW	CHARGE W/LIGHT 50A ALT
6	PINK	CHARGE W/LIGHT EXTRA ALT(s)
7	GREEN ø2	WATER TEMP WARNING
8	BLACK ø2	ENGINE TEMP GAUGE SIGNAL
9	WHITE ø2	OIL PRESSURE WARNING
10	BLACK ø2	OIL PRESSURE GAUGE SIGNAL
11	BLUE ø2	EARTH
12	BROWN ø2	GLOW PLUG LAMP

Figure 23: Deluxe Control Panel Wiring Diagram

4. Prestolite 24 Volt 120 Amp Alternator Wiring Diagram

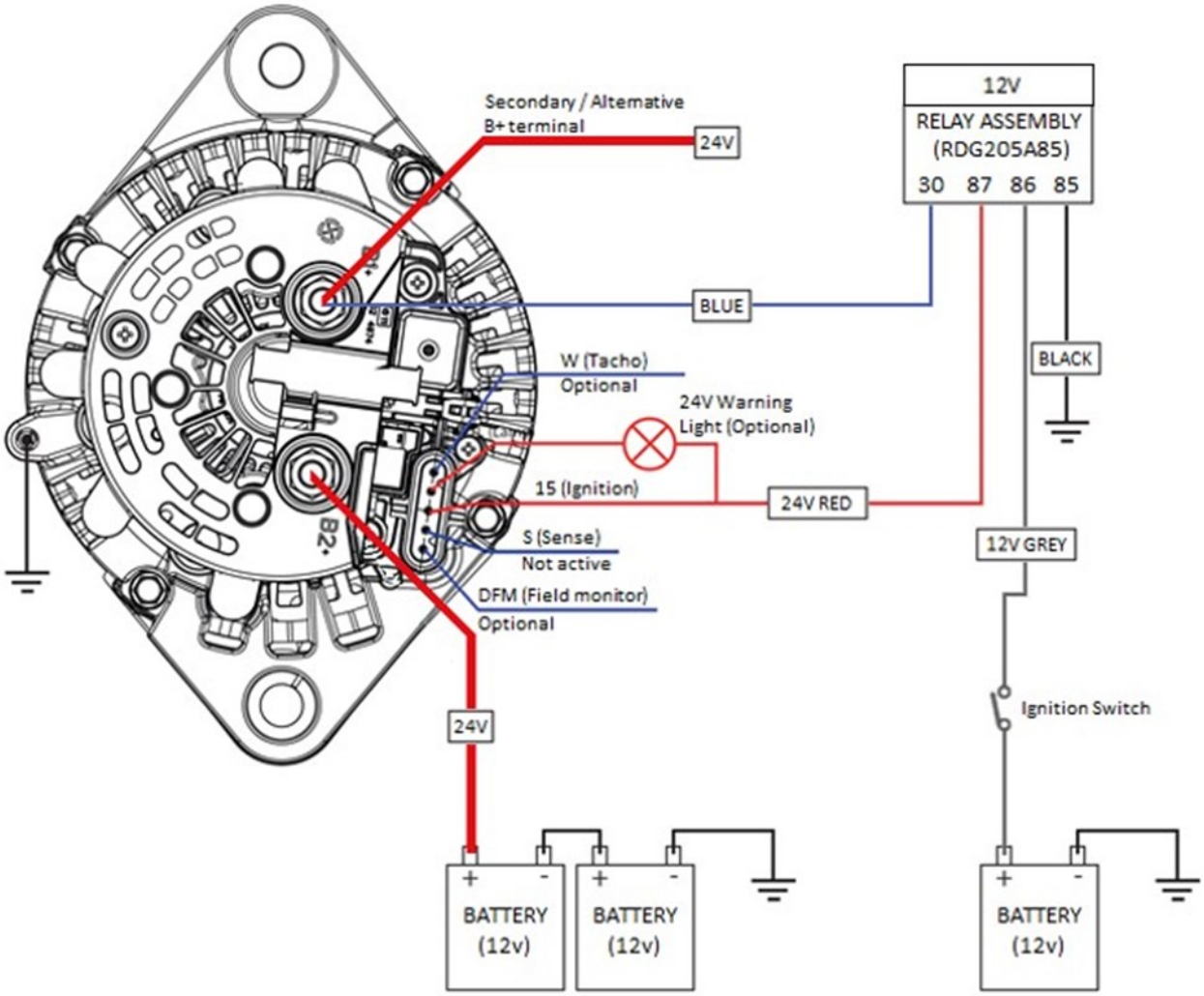

Figure 24: 24v 120A Alternator Wiring

Before wiring the 24 Volt 120 Amp Alternator, please read the information below:

- The S (Sense) terminal is not active on the AVI147J3110HD or AVI147J3113HD models so does not need connecting (on those two models).
- The W (Tacho) is an option (when a rev counter is fitted) and is not required for alternator functionality.
- The DFM (Field Monitor) usage is dependent on the engine and is not required for alternator functionality.
- The Terminal 15 (Ignition) provides excitation and **MUST** be connected.
- The L (Warning Lamp) is an option (when a warning lamp is fitted) and is not required for alternator functionality.
- The alternator is fitted with two B+ terminals. Either of the B+ terminals can be used.

- The alternator is earth return (grounded) Ensure there is a good earth connection to the engine.

A 12v ignition operated relay may be required to switch on the 24v supply to Terminal 15 if the alternator is a stand-alone item fitted to a 12v engine.

SECTION 10 – Technical Data

1. Engine Data

Engine Model	**4TNV88 BDYED SH**	
Type	Vertical In-Line Diesel Engine	
Combustion System	Direct Injection	
Aspiration	Natural	
Number of Cylinders	4	
Bore x Stroke	88 x 90mm	
Displacement	2.190L	
Rated Output/Speed	**Shire 40** 30kW (40hp) at 2400rpm	**Shire 50** 37kW (50hp) at 3000rpm
Low Idling	850 - 875 rpm	
High Idling	3210 ±25 rpm	
Direction of Rotation	Counter clockwise Viewed from Flywheel End	
Lubricating System	Forced Lubrication with Trochoid Pump	
Normal Oil Pressure at Rated Engine Speed	0.39 – 0.54 MPa / 3.9 – 5.4 bar / 56 – 78 psi	
Normal Oil Pressure at Low Idle Speed	0.068 MPa / 0.68 bar / 10 psi	
Electric Starting System	Starter Motor: DC12V	
	Starter Capacity: 2.3kW	
	Minimum Recommended Start Battery Capacity: 12V 65Ah	
Top Clearance (Piston to Head Clearance at tdc)	0.73 ± 0.06mm	
Valve Clearances (Exhaust and Inlet)	0.15 – 0.25mm	

2. Return Diesel System

Maximum Fuel Temp	33°c
Maximum Flow	0.6 Litre / Min (3000 rpm)
Flow at Idle	0.5 Litre / Min

The flexible fuel lines used on the engine comply with ISO 7840.

3. Dry Weight of Engine Data

Dry Weight of Engine (Including Gearbox)*	
Model	**Dry Weight (kg)**
Shire 40	270kg
Shire 50	284kg

* The dry weights stated are for the standard engine in each model range. If a different gearbox or additional alternators are ordered the weight will change accordingly.

SECTION 11 – Dealer List

Area	Company	Telephone	Email
BERKSHIRE	Driveline Marine	0118 942 3877	tam@drivelinemarine.com
	Marcus Marine Engineering Ltd (Servicing, Repairs & Breakdowns only)	07900890911	marcusmarine@icloud.com
BRISTOL	Advance Marine	01275 815910	phil@advancemarine.co.uk
CHESHIRE	Midland Chandlers	01928 751 800	preston.brook@midlandchandlers.co.uk
	Nantwich Canal Centre	01270 625122	info@nantwichcc.com
CORNWALL	Black Dog Marine	01503 265898	blackdogmarine@googlemail.com
	Cellar Marine	01326 280214	john@cellarmarine.com
	Smith's Boat Yard	01208 862815	info@smithsboatyard.co.uk
	Armada Engineering	01326 375566	sales@armadamh.co.uk
CUMBRIA	Windermere Aquatic Ltd	01539 442121	service@aquaticboatcentres.com
DERBYSHIRE	Midland Canal Centre	01283 701933	info@mccboats.co.uk
DEVON	Sleeman & Hawken Ltd	01626 778266	keith@sleeman-hawken.co.uk
	Tonto Marine	01803 844399	enquiries@tontomarine.co.uk
	Mobile Marine	01297 631821	mobilemarine@btconnect.com
	Darthaven Marina	01803 752242	admin@darthaven.co.uk
DORSET	Purbeck Marine	01202 686592	purbeckmarine@aol.com
	Rob Perry Marine	01297 631314	sales@robperrymarine.co.uk
EAST SUSSEX	Peter Leonard Marine	01273 515987	info@plmarine.com
ESSEX	French Marine Motors Ltd	01206 305233 01255 850303	info@frenchmarine.com
HAMPSHIRE	Marine Power Ltd	0238 0403918	info@marine-power.co.uk
HEREFORDSHIRE	Starline Marine	01684 593443	narrowboats@starline.demon.co.uk
HERTFORDSHIRE	Keypart Ltd	01923 276000	sales@keypart.com
	Lee Valley Marina	01920 870499 01920 293101	stansteadmarina@vibrantpartnerships.co.uk
	P & S Marine	01923 248372	pandsmarinellp@gmail.com
LEICESTERSHIRE	Foxton Boat Services Ltd	01162 792285	tony@foxton-boats.freeserve.co.uk
LONDON	Lee Valley Marina	020 88061717	springfieldmarina@vibrantpartnerships.co.uk

MIDDLESEX	Lindon Lewis Marine	01932 247427	service@pushtheboatout.com
NORFOLK	French Marine Motors Ltd	01603 722079	info@frenchmarine.com
NORTHAMPTON	Grand Junction Boat Co.	01604 858043	grandjunco@talk21.com
	Midland Chandlers	01788 891401	braunston@midlandchandlers.co.uk
NOTTINGHAM	Farndon Marina	01636 705483	info@farndonmarina.co.uk
OXFORDSHIRE	Service Engine UK	01993 835157	info@serviceenginesuk.co.uk
SHROPSHIRE	Maestermyn (Marine) Ltd	01691 662424	enquiries@maestermyn.co.uk
STAFFORDSHIRE	JD Boat Services Ltd	01902 791811	jdboats@btinternet.com
	River Canal Rescue	01785 785680	enquiries@rivercanalrescue.co.uk
	Stone Boatbuilding Company	01785 785680	stonechandlery@aol.com
	Streethay Wharf	01543 414808	office@streethaywharf.co.uk
WARWICKSHIRE	Barry Hawkins Narrowboats	01827 711762	boats@hawkinsyard.freeserve.co.uk
	Fenny Marina	01527 876438	enquiries@craftedboats.co.uk
	Onboard Energy	02476 393333	sales@onboardenergy.com
	Springwood Haven Leisure Ltd	0845 4566572	enquiries@springwoodhaven.co.uk
	Valley Boat Services Ltd	07990528123	enquiries@valleycruises.co.uk
WEST MIDLANDS	Stephen Goldsbrough Boats	01564 778210	andy@sgboats.com
WILTSHIRE	Devizes Marina	01380 725300	sales@devizesmarina.com
	Foxhangers Marine	01380 828795	info@foxhangers.co.uk
WORCESTERSHIRE	J L Pinder & Son	01527 876438	sales@jlpinderandsons.co.uk
	Starline Narrowboats	01684 874774	narrowboats@starline.demon.co.uk
	Starline Narrowboats	01531 632003	enquiries@starlinenarrowboats.co.uk
YORKSHIRE	Rodley Boat Centre	01132 576132	John.snowdenz@ntlworld.com
MONMOUTHSHIRE	Castle Narrowboats	01873 830001	castlenarrowboats@btinternet.com
SHETLAND	DH Marine (Shetland) Ltd	01595 690618	mail@dhmarine.co.uk
NORTHERN IRELAND	South Shore Marine	020 38341010	info@southshoremarine.co.uk
EIRE	Dun Laoghaire Marine Services	00353 12104776	info@dlms.ie
	O'Sullivans Marine	003536 67124524	brian@sulliansmarine.com
	Oysterhaven Boats	00353 214843626	sales@oysterhavenboats.com

SECTION 12 – Shire Parts

Model	40	50
Primary Fuel Filter	RDG9188346	RDG9188346
Secondary Fuel Filter	119802-55801	119802-55801
Oil Filter	129150-35153	129150-35153
50A Alternator	129423-77200	129423-77200
50A Alternator Belt	RDG004A4	RDG004A4
70A Alternator (Option)	RDG5682	RDG5682
70A Alternator Belt (Option)	25132-003700	25132-003700
150A Alternator (Option)	RDG20110201	RDG20110201
150A Alternator Belt (Option)	RDG6076	RDG6076
240A Alternator (Option)	RDG2019682	RDG2019682
240A Alternator Belt (Option)	RDG0047498	RDG0047498
Air Filter Element	RDG5795	RDG5795
Zinc Anti Corrosive Anode	119574-44150	119574-44150
Zinc Sticker	124220-09340	124220-09340
Camshaft Mounted Seawater Pump (Standard)	RDG907A7	RDG907A7
Camshaft Mounted Seawater Pump Front Cover	RDG501A35	RDG501A35
Camshaft Mounted Seawater Pump Mechanical Seal	RDG007A7	RDG007A7
Camshaft Mounted Seawater Pump Retaining Circlip	RDG907A17	RDG907A17
Camshaft Mounted Seawater Pump End Plate O-Ring	RDG003A13	RDG003A13
Camshaft Mounted Seawater Pump End Plate	RDG501A35	RDG501A35
Raw Water Pump Impellor for front camshaft mounted pump (Standard)	RDG010A4	RDG010A4

Crank Mounted Seawater Pump (Option)	RDG9079564	RDG9079564
Raw Water Pump Impellor for front crank mounted pump (Option)	17.200.107 (or RDG0109627)	17.200.107 (or RDG0109627)

Control Panel:

Standard Control Panel	RDG20710110
Deluxe Control Panel	RDG20710111

'E' Kit:

3.5kW 'E' Kit Alternator Belt	RDG0047511
5kW 'E' Kit Alternator belt	RDG0047511

Fuses & Relays

The electrical system is fitted with three or four blade type fuses:

1	Engine Stop Control System Fuse	40amp	RDG3246
2	Control Panel Supply Fuse	15amp	RDG3245
3	Engine Start Control System Fuse	15amp	RDG3245
4	Glow Plug Fuse	40amp	RDG3246
5	Cold Start Relay	-	RDG5279
6	Starter Relay	-	RDG1396

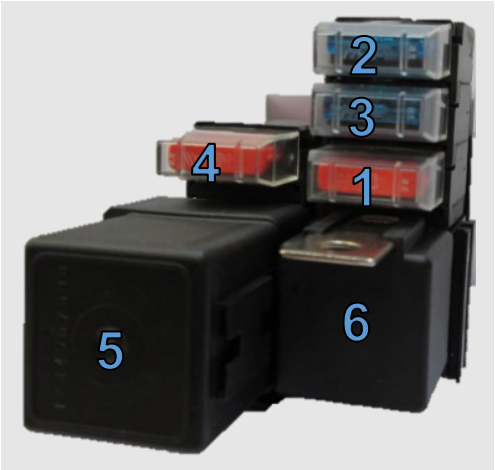

Figure 25: Fuses & Relays

Engine Oil:

Engine Oil is available from your Shire Dealer in convenient 5 litre containers (Part Number RDG6110).

Diesel Fuel Additive:

Diesel fuel additive is available from your Shire Dealer in a handy 500ml container (Part No RDG80210219).

Shire Parts Book:

On the E.P Barrus Website there is a Shire 40WB Parts Book and Shire 50WB Parts Book which has a more extensive list of parts available for your engine. To access the Shire Parts Books on the internet, type the following short link into your search engine:

https://www.barrus.co.uk/divisions/marine/diesel/shire/downloads/shire-parts/?p=1

SECTION 13 – Afterlife Recycling

When it becomes necessary to dispose of your engine. This may be possible at recycling centre; however, it will likely require careful disassembly first before disposal. For further information please contact your local recycling centres for disposal advice to see what they will accept for disposal.

Engines are primarily made up of steel, cast iron and aluminium; and are are recyclable after removal of other parts. Larger components such as the engine block may only be handleable by a few centres, unlike say smaller plastic components.
Most of the other parts require special disposal as they include hazardous waste, and must be separated and declared upon disposal, including:

Fluid Disposal
You must make sure that all unused oil, fuel and coolant is drained out carefully and disposed of correctly at a local recycling centre. Under NO circumstance must any oil, fuel or coolant be put down any drains or leaked into waterways or the environment.

Contact local recycling centres or garages, or check their websites to find out whether they take or recycle engine fluids. If they don't, they may be able to direct you to your nearest drop-off point depending on the volume. Recycle your coolant/oil/fuel in distinct well-sealed containers that are clearly labelled.

Waste Electrical Electronic Equipment (WEEE) and Battery recycling
Parts contain WEEE waste or batteries should not be disposed of in your domestic waste. You should recycle WEEE or batteries in accordance with your local authority or recycling centre's directions. Batteries will need declaring separately for safety purposes.

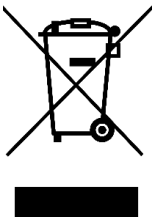

Packaging materials that are unwanted should be sorted, with cardboard, wood, and paper recycled where possible. Some Local Authorities and recycling centres may accept plastic bags, films and bubble wrap for recycling. Polystyrene is very rarely recycled and may have to be disposed of in general rubbish, inside bags.

Reduce, Reuse, Recycle

For further information about disposal please contact your Local Authority. You can also get more advice and guidance about recycling in your area at the following website http://www.recycle-more.co.uk.

SECTION 14 - Declarations

1. Declaration of Conformity for Recreational Craft Propulsion Engine with the requirements of Directive 2013/53/EU.

Name of Engine Manufacturer: **E.P.Barrus LTD**

Name of Authorised Representative: **E.P.Barrus LTD**
Address: **E.P.Barrus LTD, Launton Road, Bicester, Oxon, OX26 4UR, England, United Kingdom**

Name of Notified Body for exhaust emission assessment: HPi Verification Services (Ireland) Ltd
Address: HPi Verification Services (Ireland) Ltd, Clonross
Town: Dunshaughlin Post Code: A85 XN59
Country: Ireland ID Number: 2810

Conformity assessment module used for exhaust emissions: ☐ B+C ☐ B+D ☐ B+E ☐ B+F ☐ G ☐ H
Or engine type-approved according to: Directive 2013/53/EU
Other Community Directives applied:

Description of Engine(s) and Essential Requirements

Engine Type: Inboard Engine **Fuel Type**: Diesel **Combustion Cycle**: 4 Stroke

Identification of Engine(s) covered by this Declaration of Conformity

Engine Model	**Engine Type**	**Engine Family code**	**Type Approval Certificate Number**
Shire 40 / 50	4TNV 88 BDYED	G2YDXCL0164N3N	HPiVS-iR1105-T005-I-01-00

Essential Requirements	Standards	Other normative document/method.	Technical file	Specify in more detail *= Mandatory standard.
Annex 1.B- Exhaust Emissions				
B.1 Engine Identification	☐	☑ RCD (**II**)	☑	2013/53 EU
B.2 Exhaust emission requirements	☑*	☐	☐	* EN ISO 8178-4:2017 Test Cycle 1
B.3 Durability	☐	☐	☐	2013/53 EU
B.4 Owners Manual	☑	☐	☐	ISO10240
Annex 1. C- Noise Emissions	See Declaration of Conformity of the craft in which the engine(s) has(have) been installed			

This declaration of conformity is issued under the sole responsibility of the manufacturer. I declare on behalf of the engine manufacturer that the engine(s) [is (are) in conformity with the type(s) for which above mentioned EC type-examination or type approval certificate(s) has (have) been issued and][1] will meet the exhaust emission requirements of Directive 2013/53/EU when installed in a recreational craft, in accordance with the engine manufacturer's supplied instructions and that this (these) engine(s) must not be put into service until the recreational craft which it is (they are) to be installed has been declared in conformity with the relevant provisions of the above mentioned Directives.

Tim Hart
Sales Director
Signed: Bicester, UK
Date: 01/01/2021

2. Declaration of Conformity for Recreational Craft Propulsion Engine with the requirements of the Recreational Craft Regulations 2017 (UKCA Marking).

Name of Engine Manufacturer: **E.P.Barrus LTD**

Name of Authorised Representative: **E.P.Barrus LTD**
Address: **E.P.Barrus LTD, Launton Road, Bicester, Oxon, OX26 4UR, England, United Kingdom**

Name of Notified Body for exhaust emission assessment: HPi CEproof Ltd
Address: HPi CEproof Ltd, The Manor House, Howbery Park
Town: Wallingford Post Code: OX10 8BA
Country: United Kingdom ID Number: 1521

Conformity assessment module used for exhaust emissions: ☐ B+C ☐ B+D ☐ B+E ☐ B+F ☐ G ☐ H
Or engine type-approved according to: Directive 2013/53/EU
Other Community Directives applied:

Description of Engine(s) and Essential Requirements

Engine Type: Inboard Engine **Fuel Type**: Diesel **Combustion Cycle**: 4 Stroke

Identification of Engine(s) covered by this Declaration of Conformity

Engine Model	**Engine Type**	**Engine Family code**	**Type Approval Certificate Number**
Shire 38 / 40 / 45 / 50	4TNV 88 BDYED	G2YDXCL0164N3N	HPiUK-R1105-T005-I-01-01
Shire 38 / 40 / 45 / 50	4TNV88BDYAID	G2YDXCL0164N3N	HPiUK-R1105-T005-I-01-01

Essential Requirements	Standards	Other normative document/method.	Technical file	Specify in more detail *= Mandatory standard.
Annex 1.B- Exhaust Emissions				
B.1 Engine Identification	☐	☑ RCD (**II**)	☑	2013/53 EU
B.2 Exhaust emission requirements	☑*	☐	☐	* EN ISO 8178-4:2017 Test Cycle 1
B.3 Durability	☐	☐	☐	2013/53 EU
B.4 Owner's Manual	☑	☐	☐	ISO10240
Annex 1. C- Noise Emissions	See Declaration of Conformity of the craft in which the engine(s) has(have) been installed			

This declaration of conformity is issued under the sole responsibility of the manufacturer. I declare on behalf of the engine manufacturer that the engine(s) [is (are) in conformity with the type(s) for which above mentioned EC type-examination or type approval certificate(s) has (have) been issued and][1] will meet the requirements of the Recreational Craft Regulations 2017 when installed in a recreational craft, in accordance with the engine manufacturer's supplied instructions and that this (these) engine(s) must not be put into service until the recreational craft which it is (they are) to be installed has been declared in conformity with the relevant provisions of the above mentioned Directives.

Tim Hart
Sales Director
Signed: Bicester, UK
Date: 07/07/2021

3. Declaration of Incorporation of Partly Completed Machinery

(Original declaration according to Directive 2006/42/EC, Annex II, part 1B)

1. The manufacturer:	E. P. Barrus Limited Glen Way Launton Road Bicester OX26 4UR England United Kingdom			
2. Authorised Compiler of Relevant Technical Documentation:	Mr. Graeme Aldridge Glen Way Launton Road Bicester OX26 4UR England United Kingdom			
3. Partly Completed Machinery:	Designation:	Marine engines for propulsion of, and incorporation into, watercraft.		
	Description:		Serial No.:	and their derivatives.
		Shire 38	XX-2400-X	
		Shire 40	XX-2400-X	
		Shire 45	XX-2400-X	
		Shire 50	XX-2400-X	
	Base Engine:	Yanmar 4TNV88 BDYED		
4. The essential health and safety requirements of the Directive 2006/42/EC, Annex I, relating to the design and construction of the engines have been applied and fulfilled as shown in Annex A of this Declaration. The relevant technical documentation is compiled in accordance with part B of Annex VII of the Directive. The engines also comply with Directive 2013/53/EU (Recreational Craft Directive), when installed in accordance with the installation instructions that accompany the engine.				
5. In case of a reasoned request by the national authority, we will supply the relevant technical information of the above named engines to the person in charge.				
6. This partly completed machinery must not be put into service until the final machinery into which it has been incorporated has been declared in conformity with the provisions of this directive, where appropriate.				
7. This declaration is made on 27 June 2018 in Bicester, Oxfordshire.				
Tim Hart Sales Director E. P. Barrus Limited				

4. EU Declaration of Conformity with the Exhaust Emissions Requirements of Directive 2013/53/EU

(Original declaration according to Directive 2013/53/EU)

1. The manufacturer:	E. P. Barrus Limited Glen Way Launton Road Bicester OX26 4UR			
2. Authorised Compiler of Relevant Technical Documentation:	Mr. Graeme Aldridge Glen Way Launton Road Bicester OX26 4UR			
3. Partly Completed Machinery:	Designation:	Marine engines for propulsion of, and incorporation into, watercraft.		
	Description:		Serial No.:	and their derivatives.
		Shire 38	XX-2400-X	
		Shire 40	XX-2400-X	
		Shire 45	XX-2400-X	
		Shire 50	XX-2400-X	
	Base Engine:	Yanmar 4TNV88 BDYED		
4. The essential health and safety requirements of the Directive 2006/42/EC, Annex I, relating to the design and construction of the engines have been applied and fulfilled as shown in Annex A of this Declaration. The relevant technical documentation is compiled in accordance with part B of Annex VII of the Directive. The engines also comply with Directive 2013/53/EU (Recreational Craft Directive), when installed in accordance with the installation instructions that accompany the engine.				
5. In case of a reasoned request by the national authority, we will supply the relevant technical information of the above named engines to the person in charge.				
6. This partly completed machinery must not be put into service until the final machinery into which it has been incorporated has been declared in conformity with the provisions of this directive, where appropriate.				
7. This declaration is made on 27 June 2018 in Bicester, Oxfordshire.				
Tim Hart Sales Director E. P. Barrus Limited				

SERVICE RECORD CARD

Model: .....

Engine No: .....

Carried out by E.P.Barrus **Print Name:** PDI **Actual Hours:** **Signed:**	**Boat Builder Stamp:** **Commission of Boat and Hand Over to Customer. (Refer to the Installation Check List Page in this Manual).** **Date:** **Signed:**
Dealer Stamp: 1st **Actual Hours:** **Signed:**	**Dealer Stamp:** 2nd **Actual Hours:** **Signed:**
Dealer Stamp: 3rd **Actual Hours:** **Signed:**	**Dealer Stamp:** 4th **Actual Hours:** **Signed:**
Dealer Stamp: 5th **Actual Hours:** **Signed:**	**Dealer Stamp:** 6th **Actual Hours:** **Signed:**

Please refer to Owner's Manual for service intervals