ORIGINAL INSTRUCTION

SHIRE CANAL ENGINE MANUAL

For the following engine model*:
Shire 39
Shire 43
Shire 49

*Standard Model, there may be a number of optional extras, or alternative components, that might be fitted to an engine that are not shown in this book.

RDG603A63 – Issue 14

SAFETY

E.P. Barrus is concerned for your safety. We use safety statements throughout the manual to call your attention to the potential hazards associated with the operation of your Shire engine.

Follow the precautions listed throughout the manual before operation, during operation and during servicing/maintenance procedures for your safety, the safety of others and to protect the performance of your engine.

Safety alert symbol appears throughout the manual. It means attention, be alert as your safety is involved. Please read and follow the message that appears after the safety alert symbol.

NOTICE:	This indicates a situation which can cause damage to the machine, personal property and/or the environment or cause the equipment to operate improperly
CAUTION:	This indicates a hazardous situation which, if not avoided, could result in minor or moderate injury.
WARNING:	This indicates a hazardous situation which, if not avoided, could result in death or serious injury.
DANGER:	This indicates a hazardous situation which, if not avoided, will result in death or serious injury.

Engine Details

Engine Serial Number:	

Please enter your engine serial number in the space provided above. Please quote the engine identification number during any enquiry or when ordering spare parts. Information about the engine serial number and its location on the engine can be found in **SECTION 2** of the manual.

Shire Engine Manuals and Shire Parts Books

SCAN ME

To access the complete Shire Engine Manuals and Shire Parts Books on the internet type the following short links into your search engine or just scan the QR code above.

https://shireshop.co.uk/ - Shire Shop
https://www.barrus.co.uk/shire-manuals/ - Complete Shire Engine Manuals
https://www.barrus.co.uk/shire-parts/ - Shire Parts Books

NOTICE:

THIS MANUAL FORMS AN INTEGRAL PART OF THE ENGINE IT ACCOMPANIES, IF A TRANSFER OF TITLE OCCURS, IT MUST ALWAYS BE HANDED OVER TO THE NEW OWNER.

Thank you for purchasing this Shire Canal Boat Marine Engine from E.P.Barrus. This manual has been compiled to help you to operate your engine and its associated parts with safety and pleasure. Please read it carefully in conjunction with the PRM Gearbox Manual and familiarise yourself with the engine and its parts before operation. The PRM Gearbox Manual is also available from the PRM website:

www.prm-newage.com

If the engine is fitted with an E-Kit and/or Hybrid options, please also read the supplied manuals for them carefully.

The information and recommendations given in this manual are based on the latest information available at the time of publication. E.P.Barrus reserve the right to change the specification of its products and manuals without prior notice.

Depending upon the equipment specification of the engine and accessories fitted, there may be discrepancies with the information presented in this handbook. No claims may be pursued in this respect.

WARRANTY

The Shire UK Limited Warranty provides coverage for up to three years or 2000 hours (whichever occurs first) for recreational users and two years or 2000 hours (whichever occurs first) for commercial users from the date of warranty commencement. This is dependent on the following conditions.

This covers the majority of Shire Engine components with the exception of the items as stated in this document.

To ensure that you have been registered for your warranty, please detach and fill in the form on the back of this manual.
Return it to the address given or email it to Richard.Cooke@barrus.co.uk
The Warranty will only apply if the following have been carried out and the registration form has been completed and returned to Barrus.

The warranty period begins when either the owner registers the engine or it is triggered automatically. A discretionary period of 6 months is given following the delivery of the engine (to allow for installation and commissioning), following this the warranty period will automatically start.

The repair or replacement of parts, or the performance of service under this warranty, does not extend the life of this warranty beyond its original expiry date.

TERMS
It is the responsibility of the boat builder or owner to ensure the Shire Engine is registered for warranty.

The Warranty will only apply if the following have been carried out:

- The installation is in full compliance with the requirements defined in the manual and the checklist completed and signed by the engine installer.
- A copy of completed engine installation checklist accompanies the warranty registration form.
- The boat builder or engine installer has completed the Boat Builder Section on the Service Record Card (located at the back of the manual) regarding hand over and commissioning of boat.
- The engine and ancillary systems are installed in compliance with current and applicable national and international standards.
- The maintenance has been completed to the full requirements, using genuine parts and recorded in the manual.

SAFETY
E.P Barrus staff or their representatives can only carry out warranty repairs if there is suitable and safe access to the boat and engine room.

PRM GEARBOXES
PRM Gearboxes are covered by a three year warranty for recreation users and two years for commercial users.

ELECTRICAL SYSTEMS

Shire Engine alternator, starter motor and electrical components are subject to a limited one year warranty.

FUEL SYSTEMS

Fuel injection and supply equipment including the injectors and pump(s) are subject to a limited one year warranty.

It is a condition of the warranty that a separate water trap is fitted between the fuel tank and the engine fuel lines (in addition to the filters fitted to the engine). The fuel tank should always be kept clear of dirt, water and any other contamination. It is not recommended that the fuel tank be run completely empty as this will induce air into the fuel system and can cause fuel injection or starting system damage- which would not be covered by the warranty.

Upon installation the fuel system should be pressure or vacuum tested to ensure no leaks are present. Poor quality fuel systems can cause engine fuel injection system damage which is not covered by the warranty. The fuel system should be fully primed ahead of engine starting- failure to do so can cause damage to the engine starting system and fuel system- this damage is not covered by the warranty.

POOR QUALITY FUEL

Poor running (including smoking) engines that are being run (or have been run) on low quality or contaminated fuel are not covered by the warranty. Any replacement parts that are required as a consequence of using incorrect or low quality fuel are not covered by warranty.

Engine and fuel equipment is not covered by warranty if bio-diesel that does not comply with EN15940 is used (See 5. Refuelling of Section 6 – Operation).

Only fuel fully compliant with EN590 or EN15940 should be used in Shire Engines. Failure to comply with this may invalidate the warranty.

CONDITIONS THAT MUST BE MET IN ORDER TO OBTAIN WARRANTY COVERAGE

Warranty coverage is only available from EP Barrus Ltd. Routine maintenance outlined in the Owner's Manual must be performed using genuine parts in order to maintain warranty coverage. If the customer performs maintenance to an insufficient level, Barrus reserves the right to withdraw warranty coverage.

WARRANTY CLAIMS

Warranty claims must be made by either an authorised dealer or directly to EP Barrus.

The dealer or boat builder will arrange for the inspection and any necessary repairs. If the repairs carried out are not covered by the warranty, the purchaser shall pay for all related labour and material, and any other expenses associated with that service.

Any claim should be made as soon as possible, and no later than two weeks after the initial discovery of the defect. No agent outside the EP Barrus Ltd network should be instructed before the defect has been reported and agreement made with EP Barrus Ltd.

WHAT IS NOT COVERED

This limited warranty does not cover the following:

- Routine maintenance and service items,
- Adjustments,
- Normal wear and tear,
- Damage caused by abnormal or incorrect use,
- Operation of the product in a manner inconsistent with the recommended operation/duty cycle,
- Accident, submersion,
- Improper installation (i.e. an installation not consistent with the requirements laid out),
- Systems using or affected by an accessory or part not manufactured or sold by EP Barrus Ltd,
- Systems that have been altered or modified (including addition of electrical systems such as charge boosters or other electrical management products),
- Expenses related to crane-out, launch, towing, storage, telephone, rental, inconvenience, slip fees, insurance coverage, loan payments, loss of time, loss of income, or any other types of accidental or consequential loss or damages,

Engine and engine starting systems are not covered by warranty if it is found that the engine start battery or supply circuit/system is not of the correct specification. Or if the engine start battery is partially or fully discharged.

Damage due to rust or corrosion, submersion, or unreasonable exposure to the environment, such as exposure to high humidity, rain fall, or seawater, or conditions resulting in the freezing of cooling water are not covered.

Water ingression of any kind into the engine via any means (other than the cooling system) will void the warranty. It is the responsibility of the owner/installer to ensure that no water can enter the engine during use or storage.

The standard alternators fitted to Shire Engines are not suitable for charging lithium-ion batteries. If the standard alternators are used for charging lithium-ion batteries, they will not be covered under warranty. If lithium-ion batteries are to be used a specialist alternator will be required.

FREQUENT RUNNING

To ensure ongoing and reliable operation, Engines should not be left without running for periods of more than two weeks at any one time. If not required to run, every two weeks the engine should be started and run under load until correct operating temperature is reached- this should then be maintained for a minimum of 15 minutes.

TRANSFER OF WARRANTY

The warranty is valid for the first owner of the Shire engine and is transferrable only at the discretion of EP Barrus Ltd.

DELIVERY

Damage caused during transport (or before delivery) must be reported to the courier and the delivery signed for highlighting it. Failure to do so may result in the damage not being covered.

Any parts missing from a delivery should be reported to EP Barrus within 3 working days. Photographs of the shipment including packaging will be required.

Note. Engines and ancillary parts are photographed, recorded and stored prior to shipment to the customer.

River Canal Rescue Membership

RCR offer a number of support packages and services to give the inland boater peace of mind in the event of an incident, breakdown or emergency. They offer year round 24/7 national breakdown and recovery assistance for members on the inland waterways.

Please see RCR leaflet included with the other engine documents for more details. The leaflet is stamped and RCR will offer a first year 20% discount to all new Shire engine owners. To gain this discount please call RCR on 01785785680. Please have ready to hand your Shire warranty registration date.

Note: This does not affect the normal Shire engine warranty arrangement.

Index

Page

SECTION 1 – Safety Precautions 13

1. General 13
2. Lifting 13
3. Rotating Shafts and Belts 14
4. Exhaust System 14
5. Launching and Lifting Boats 15
6. Batteries 15

SECTION 2 – Engine Identification 16

SECTION 3 – Component Identification 17

1. Shire 39 17
2. Shire 43 18
3. Shire 49 19

SECTION 4 – Control Panel 20

1. Basic Control Panel 20
2. Standard Control Panel 20
3. Deluxe Control Panel 21
4. Control Panel Overview 21
5. Warning Light Procedure 21
6. Overall Dimensions of the Basic Control Panel 23
7. Overall Dimensions of the Standard Control Panel 24
8. Overall Dimensions of the Deluxe Control Panel 24

SECTION 5 – Installation 25

1. Ventilation 25
2. Engine Beds 25
3. Cooling System 25
4. Skin Tanks 25
5. Engine Cooling Water Inlet and Outlet Hose Connections 26
6. Pressurised Water Header Tank 27

7. Calorifier 28
8. Shaft Connection and Propeller Selection 29
9. Engine Anti-Vibration Mounts 29
10. Engine Alignment 32
11. Engine Inclination 32
12. Electrics 33
13. Electrical Options 34
14. Engine Oil 34
15. Fuel 34
16. Coolant 35
17. Control Cables 36
18. Domestic Battery Bank 36
19. Control Panel 38
20. Exhaust System 39
21. Hydraulic Drive Transmissions 40
22. Centa Coupling CF-M-160 (RDG2779) 41
23. PRM 280DP Gearbox with Power Take Off (Optional Extra) 42
24. Engine Start Battery 42
25. Additional Wiring Connection 42
26. Installation Check List 43
SECTION 6 – Operation 44
1. Starting the engine for the first time 44
2. Starting Procedure 44
3. Stopping Procedure 45
4. Full Load Running 45
5. Refuelling 45
6. Diesel Fuel Additive 46
7. Exhaust Back Pressure 46
8. Hybrid System (For engine with Hybrid System fitted) 46
9. Single Shift Control Lever Side Mount Operation - Optional (RDG9210055) 46

SECTION 7 – Service Procedure 47
1. Engine Oil and Filter Change 47
2. Air Filter Check and Change 48
3. Gearbox Oil Change 48
4. Disposal of Oil and Related Items 50
5. Primary Fuel Filter Drain – Shire 39, 43 & 49 50
6. Primary and Secondary Fuel Filter Change 51
7. Fuel System Bleeding 52
8. Cooling System 53
9. Belt Adjustment 54
10. Belt Maintenance 54
11. Belt Replacement 55
12. Control Panel Maintenance 56
SECTION 8 – Service Schedule 57
1. Specifications and Capacities 57
2. Service Intervals 58
SECTION 9 – Wiring Diagrams 59
1. Engine Wiring Diagram Shire 39,43 & 49 59
2. Shire 39, 43 & 49 Cold Start Wiring Diagram 60
3. Basic Control Panel Wiring Diagram 61
4. Standard Control Panel Wiring Diagram 62
5. Deluxe Control Panel Wiring Diagram 63
6. Prestolite 24 Volt 120 Amp Alternator Wiring Diagram 64
SECTION 10 – Technical Data 66
1. Engine Data 66
2. Return Diesel System 66
3. Dry Weight of Engine Data 67
4. Torque Settings for Screws, Bolts and Nuts 67
5. Cylinder Head Tightening Sequence 68
6. Fuel Injection Pump 69

SECTION 11 – Dealer List 76

SECTION 12 – Shire Parts..... 78

SECTION 13 – Afterlife Recycling 80

SECTION 14 – Declarations 81

1. Declaration of Conformity for Recreational Craft Propulsion Engine with the requirements of Directive 2013/53/EU. 81

2. Declaration of Conformity for Recreational Craft Propulsion Engine with the requirements of the Recreational Craft Regulations 2017 (UKCA Marking). 82

3. Declaration of Incorporation of Partly Completed Machinery..... 84

4. EU Declaration of Conformity with the Exhaust Emissions Requirements of Directive 2013/53/EU..... 85

SECTION 15 – Shire Service Record Card..... 86

SECTION 1 – Safety Precautions

1. General

NOTICE:
NEVER PERMIT ANYONE TO OPERATE THE ENGINE WITHOUT PROPER TRAINING.

It is the responsibility of the installer/operator to ensure that the finished installation complies with CE Marking, UKCA Marking, relevant Health & Safety requirements, the Recreational Craft Directive and or any other legislative requirements before commissioning.
Ensure that the engine battery isolator switch is in the off position and the key removed from the control panel before carrying out any maintenance or repairs.

Ensure that all installations and boat alterations comply with any appropriate local, regional, national or international regulations. When installing new propulsion systems (that are not identical to the original ones) into existing craft, a new vessel Post Construction Assessment will be required, and carried out by an independent notified body.

2. Lifting

DANGER:
CRUSH HAZARD! NEVER STAND UNDER A HOISTED ENGINE. IF THE HOIST MECHANISM FAILS, THE ENGINE WILL FALL ON YOU, CAUSING SERIOUS INJURY OR DEATH.

The Lifting points supplied with the engine are for lifting the engine/gearbox only. A suitable spreader bar must be employed to prevent over-stressing either bracket during any lift.

3. Rotating Shafts and Belts

WARNING:

SEVERE HAZARD! KEEP HANDS AND OTHER BODY PARTS AWAY FROM MOVING/ROTATING PARTS. WEAR TIGHT FITTING CLOTHING AND KEEP YOUR HAIR SHORT OR TIE BACK. REMOVE ALL JEWELLERY BEFORE COMMENCING WORK. CHECK BEFORE STARTING THE ENGINE THAT ANY TOOLS OR RAGS USED DURING MAINTENANCE HAVE BEEN REMOVED FROM THE AREA.

The engine and its accessories are not intended to be put into operation until they are integrated into the boat as a whole. No person should be in the engine compartment and the engine cover or deck hatches should be closed whilst the engine is running.

4. Exhaust System

WARNING:

EXHAUST HAZARD! NEVER OPERATE ENGINE IN A BOATS ENGINE BAY WITHOUT PROPER VENTILATION. NEVER BLOCK VENTS OR OTHER MEANS OF VENTILATION. ALL COMBUSTION ENGINES CREATE CARBON MONOXIDE GAS DURING OPERATION. ACCUMULATION OF THIS GAS COULD CAUSE ILLNESS OR EVEN DEATH.

WARNING:

BURN HAZARD! WAIT UNTIL THE EXHAUST COOLS BEFORE YOU TOUCH IT.

WARNING:

ENSURE EXHAUST SYSTEM HAS COOLED DOWN AND APPROPIATE PPE (GLOVES, MASK, SEALED GOGGLES) IS WORN WHEN WORKING ON THE EXHAUST SYSTEM.

Exhaust gases may have temperatures as high as 650°C and contain elements which are harmful if ingested. It is therefore essential that exhaust systems are gas tight and lagged to prevent accidental burning and inhalation of exhaust gases when inside the boat cabin.

5. Launching and Lifting Boats

Care must be taken when launching or craning new boats into or out of the waterway, so that water does not enter the engine via the exhaust system or air vents. It is recommended that these are blocked temporarily whilst undertaking this procedure.

6. Batteries

DANGER:

EXPLOSION HAZARD! NEVER SHORT OUT THE BATTERY TERMINALS, INCLUDING WHEN CHECKING THE REMAINING BATTERY CHARGE THIS WILL RESULT IN A SPARK AND MAY CAUSE AN EXPLOSION OR FIRE.

WARNING:

BURN HAZARD! BATTERIES CONTAIN SULPHURIC ACID. NEVER ALLOW BATTERY FLUID TO COME IN CONTACT WITH SKIN, EYES OR CLOTHING. SEVERE BURNS COULD RESULT. MAKE SURE THE CORRECT PERSONAL PROTECTION EQUIPMENT IS WORN.

- Batteries can produce explosive gases; keep sparks and flames away from the battery.

NO SMOKING

- Batteries contain sulphuric acid; if splashed on skin or eyes, flush well with water and seek medical advice.
- Keep battery tops and battery compartment ventilated at all times
- If disconnecting the battery; remove the earth lead **FIRST**; and re-connect it last.
- If charging the battery; ensure that the charger is switched off before connecting and disconnecting.
- Do not tip the battery on its side.
- Please see label on battery or manufacturer's instructions for specific information.

SECTION 2 – Engine Identification

The engine serial number can be found engraved into the brass plate on the top of the engine rocker cover and stamped to the crankcase next to the starter motor. The Canal Boat Engines (CB) do not have identification initials on the engraved plate.

An example of the engine identification plate is shown below (**Figure 1**):

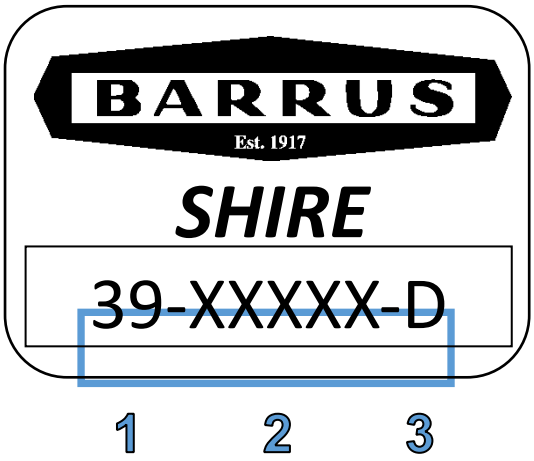

	Description
1	Engine Model
2	Serial Number
3	Indicates Model Type or Optional Extras: RB = River Boat WB = Work Boat D = Deluxe Panel 3 = 3:1 Ratio Gearbox

Figure 1: Engine Identification Badge

Description of Models:

Abbreviation	Type of Engine	Description*
CB	Canal Boat	Keel cooled dry exhaust manifold
WB	Work Boat	Seawater/Heat Exchanger cooled, dry exhaust manifold with either a dry exhaust system (same as a Canal Boat) or water injected exhaust system. Can also be used for sea going applications
RB	River Boat	Can also be used for sea going applications. Seawater/Integral exhaust manifold, heat exchanger cooled. Water injected exhaust system.

***Note**: There are a number of other optional extras that may be fitted to an engine that are not listed here.

A list of common item service part numbers can be found in **Section 12**, Shire Parts.

SECTION 3 – Component Identification

1. Shire 39

Figure 2: Shire 39 Left Side (Viewed from front)

	Description*
1	Single Thermostat Housing
2	40 Amp 12 Volt Alternator
3	150 Amp 12 Volt Alternator
4	Dry Exhaust Outlet

Figure 3: Shire 39 Right Side (Viewed from rear)

	Description*
5	Air Filter
6	Gearbox
7	Oil Filter
8	Primary and Secondary Fuel Filters
9	Engine Sump Pump

***Note**: There are a number of other optional extras that may be fitted to an engine that are not shown here.

2. Shire 43

Figure 4: Shire 43 Left Side (Viewed from front)

	Description*
1	Single Thermostat Housing
2	40 Amp 12 Volt Alternator
3	150 Amp 12 Volt Alternator
4	Dry Exhaust Outlet

Figure 5: Shire 43 Right Side (Viewed from rear)

	Description*
5	Air Filter
6	Gearbox
7	Oil Filter
8	Primary and Secondary Fuel Filters
9	Engine Sump Pump

***Note**: There are a number of other optional extras that may be fitted to an engine that are not shown here.

3. Shire 49

Figure 6: Shire 49 Left Side (Viewed from front)

	Description*
1	Single Thermostat Housing
2	40 Amp 12 Volt Alternator
3	150 Amp 12 Volt Alternator
4	Dry Exhaust Outlet

Figure 7: Shire 49 Right Side (Viewed from rear)

	Description*
5	Air Filter
6	Gearbox
7	Oil Filter
8	Primary and Secondary Fuel Filters
9	Engine Sump Pump

***Note**: There are a number of other optional extras that may be fitted to an engine that are not shown here.

SECTION 4 – Control Panel

1. Basic Control Panel

Figure 8: Basic Control Panel (Twin Alternator Engines)

	Description
1	Key Flap and Ignition Switch
2	150/240A Alternator Charge Warning Light
3	Water Temperature Warning Light
4	Oil Pressure Warning Light
5	50A Alternator Charge Warning Light
6	Glow Plug Light

2. Standard Control Panel

Figure 9: Standard Control Panel

	Description
1	Tachometer Gauge
2	Hour Meter
3	Water Temperature Warning Light
4	Oil Pressure Warning Light
5	40A Alternator Charge Warning Light
6	150/240A Alternator Charge Warning Light
7	Glow Plug Light
8	Key Flap and Ignition Switch

3. Deluxe Control Panel

Figure 10: Deluxe Control Panel

	Description
1	Tachometer Gauge
2	Hour Meter
3	Water Temperature Warning Light
4	Oil Pressure Warning Light
5	40A Alternator Charge Warning Light
6	150/240A Alternator Charge Warning Light
7	Glow Plug Light
8	Key Flap and Ignition Switch
9	40A Alternator Output Gauge
10	Oil Pressure Gauge
11	Water Temperature Gauge

4. Control Panel Overview

- All Shire engines are supplied with a control panel.
- Depending on the model of Shire engine, the control panel will either be a basic control panel, standard control panel or a deluxe control panel. The following table shows which panel comes with each type of engine as standard.

Engine	Control Panel Supplied*
Shire 39 & 43	Standard Control Panel
Shire 49	Deluxe Control Panel

* Panel supplied as standard. On certain engines a different control panel may be supplied as an option

5. Warning Light Procedure

- When the ignition is first turned on, the control panel warning lights will come on as a bulb check. When the engine is started the warning lights will go out. Please note that the water temperature warning light and glow plug light operate slightly differently.

- The water temperature warning light will only come on for a brief period of time when

the ignition is first turned on as a bulb check. It will then only illuminate in the case of the engine coolant temperature exceeding the maximum safety level.

- The glow plug light will come on when the ignition is first turned on for 5 – 8 seconds to indicate the heating system is operational. When the light goes out the engine can be started.

- Whilst the control panel is in operation all the gauges are backlit. This does not indicate a fault and is a normal function for the control panel.

- If any of the warning lights on the control panel come on **whilst** the engine is running, please follow the correct procedure as shown in the following table.

In the event of a fault, only trained and qualified personnel should undertake repairs on the engine.

	Description	Procedure for Warning Light
1	Tachometer Gauge	-
2	Hour Meter	-
3	Water Temperature Warning Light	Reduce the engine revs and stop the engine within one or two minutes. Check the coolant level (refer to **8. Cooling System of SECTION 7 - SERVICE PROCEDURE**). If the coolant level is incorrect, fill it to the correct level (refer to **8. Cooling System of SECTION 7 - SERVICE PROCEDURE**) and restart the engine. If the coolant level is correct and the fault is still present, or there is a coolant leak, please contact your local dealer.
4	Oil Pressure Warning Light	Stop the engine immediately. Contact your local dealer. Failure to stop the engine may result in permanent engine damage.
5	40A Alternator Charge Warning Light	This indicates that the alternator has stopped charging. The engine can still be operated for a short period of time. Contact your local dealer.
6	150/240A Alternator Charge	This indicates that the alternator has stopped

	Warning Light*	charging. The engine can still be operated for a short period of time. Contact your local dealer.
7	Glow Plug Light	This indicates that the cold start system is operating. If the light fails to illuminate during the starting procedure contact your local dealer.
8	Key Flap and Ignition Switch	-
9	40A Alternator Output Gauge	-
10	Oil Pressure Gauge	-
11	Water Temperature Gauge	-

*Only applicable if a second alternator is fitted to the engine

6. Overall Dimensions of the Basic Control Panel

(All Dimensions are in mm)

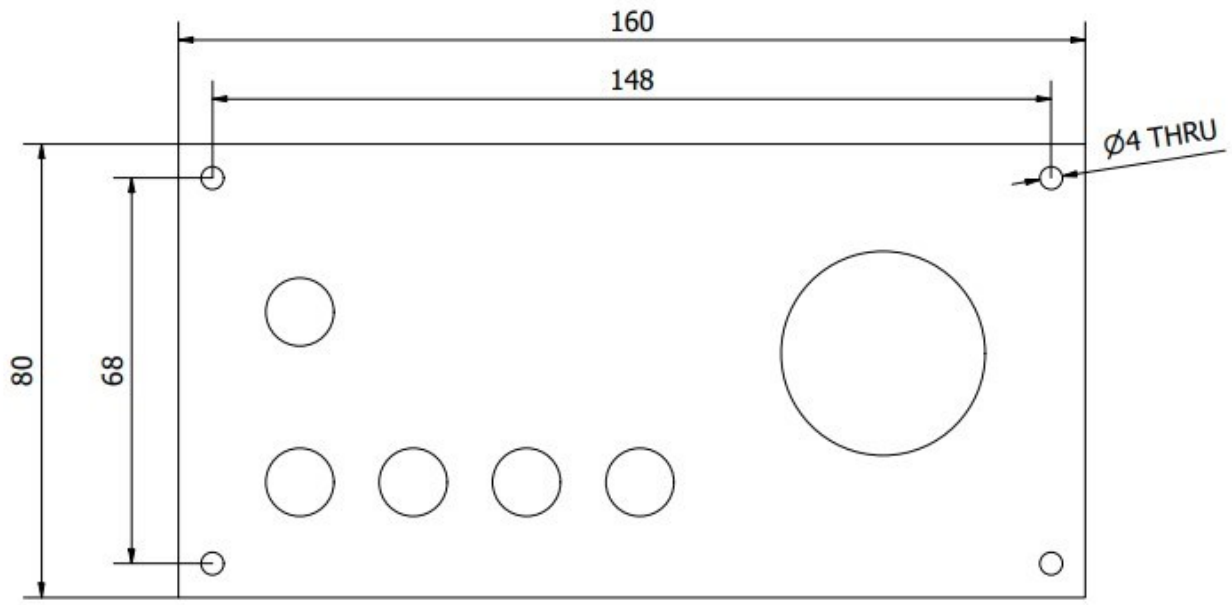

Figure 11: Basic Control Panel Dimensions

7. Overall Dimensions of the Standard Control Panel

(All Dimensions are in mm)

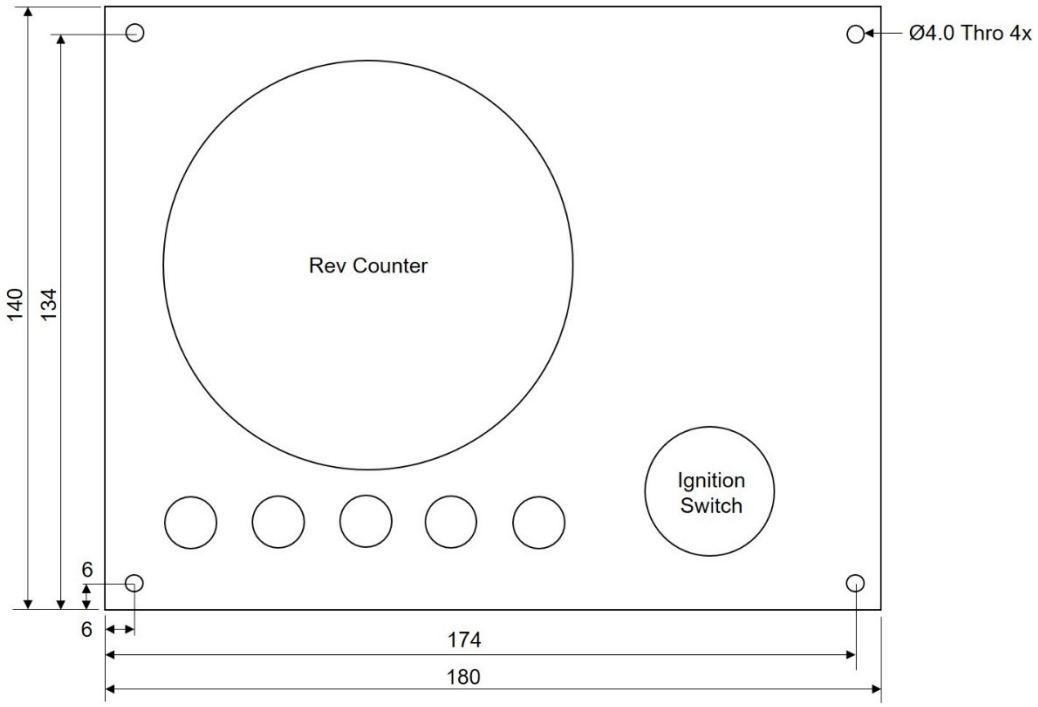

Figure 12: Standard Control Panel Dimensions

8. Overall Dimensions of the Deluxe Control Panel

(All Dimensions are in mm)

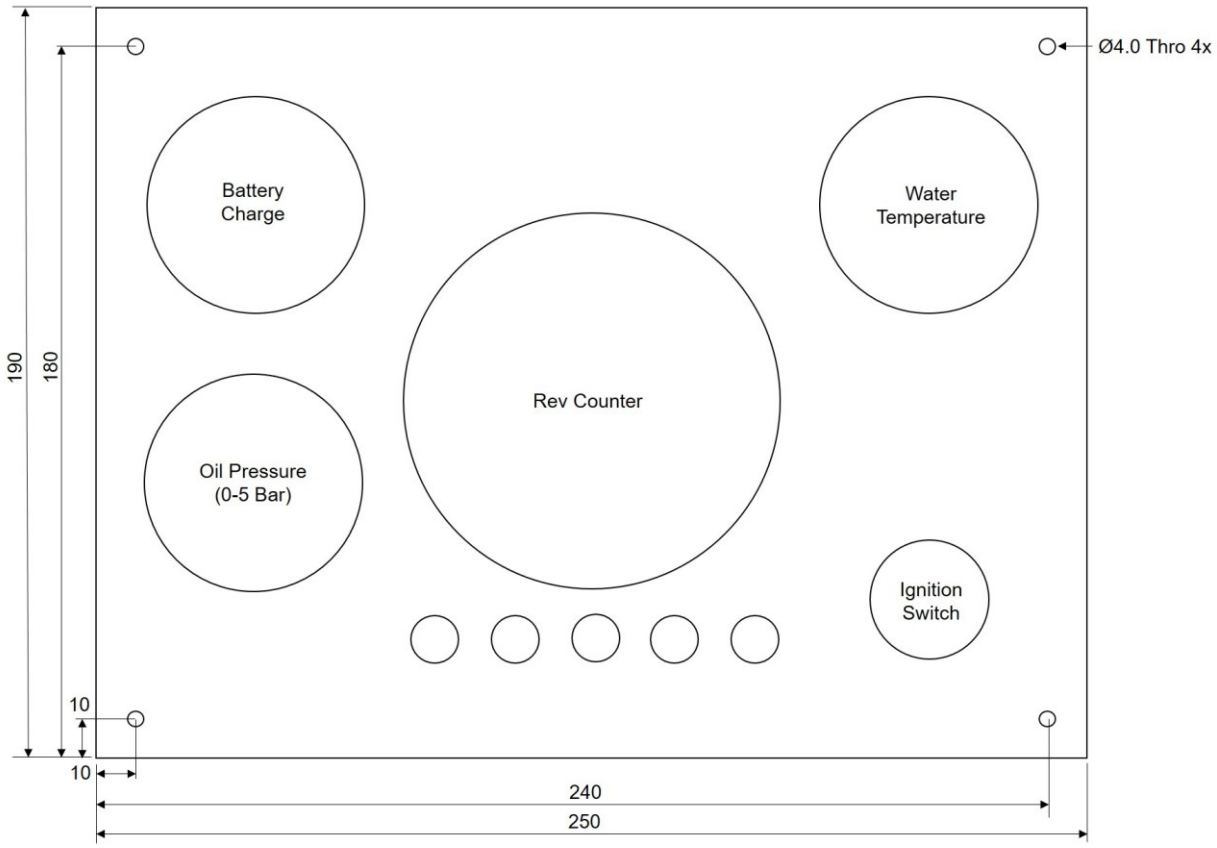

Figure 13: Deluxe Control Panel Dimensions

SECTION 5 – Installation

NOTICE:
REFER TO THE SHIRE MANUAL PRIOR TO INSTALLING THE ENGINE.

1. **Ventilation**

- All internal combustion engines radiate heat and require cool, clean air to aid complete combustion.
- Please ensure that adequate engine room ventilation is provided, by fitting at least two vents of an aperture of not less than 15,000mm^2 each (24in^2).

An allowance must be made for any grills, louvres or bends placed in the airflows and generally an increase of 25% in area is sufficient to overcome any restriction problems.

2. **Engine Beds**

- These should be a minimum of 10mm thick, extended rearward and be welded to the hull and forward to the bulkhead. Webs or gussets must be welded in place midway to prevent flexing.

3. **Cooling System**

- Ensure pipe work to and from the skin tanks is of sufficient bore. Ensure tight bends and elbows are avoided or kept to a minimum (sizes are listed overleaf).

4. **Skin Tanks**

The ideal skin tank internal thickness is between 50 and 75mm, the table below will indicate a suitable tank size. However, volume will not compensate for lack of surface area. It should be recognised that fitting a large calorifier will increase the theoretical cooling capacity only until it is up to temperature. It is unlikely that a boat on the inland waterways will operate at full power for long periods of time. The engine cooling water outlets are on the left hand (port) side of the engine. The outside of the skin tank must be completely below the waterline all of the time for effective cooling.

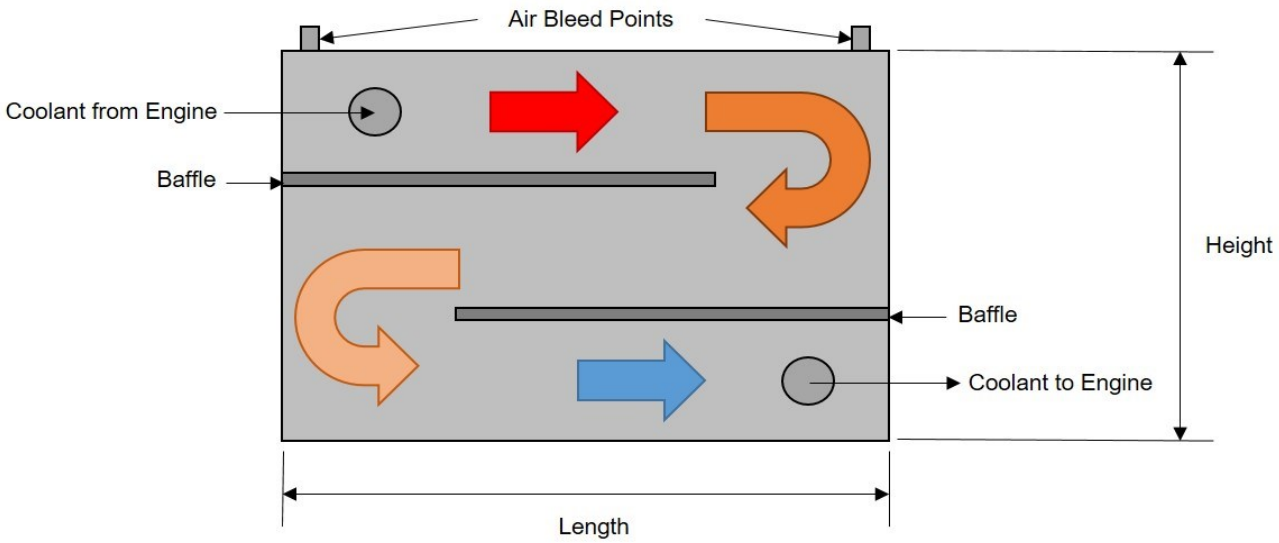

Figure 14: Skin Tank Flow Diagram

Recommended Skin Tank Size					
Engine	**HP**	**KW**	**Skin tank surface area m²**	**Suggested Height mm**	**Suggested Length mm**
39	39	29	1	721	1442
43	43	32	1	721	1442
49	49	36.5	1.25	750	1500

If a hydraulic bow thruster is used, the skin tank size must be increased by up to approx 10% or a separate skin tank installed to cool the hydraulic oil. Please refer to Section 5 – Installation, 21. Hydraulic Drive Transmission for further information.

5. Engine Cooling Water Inlet and Outlet Hose Connections

These are on the left hand (port) side of the engine:

Engine	Size (mm)
Shire 39, 43 & 49	35mm OD, inlet and 32mm OD, outlet

Use a good quality hose that cannot collapse or kink and is capable of working at temperature in excess of 100°c.

A.S.A.P. Supplies LTD can supply suitable 35mm ID hoses if the correct size hoses cannot be sourced locally. The part numbers used by A.S.A.P. Supplies LTD are shown in the

following table.

A.S.A.P Supplies Part Number	Size of Hose (mm)
206435	35mm

A.S.A.P. Supplies LTD can be contacted by:

Telephone	+44 1502 716993
Internet	www.asap-supplies.com

Please be aware that other suppliers are available.

6. Pressurised Water Header Tank

WARNING:

SCALD HAZARD! NEVER REMOVE THE HEADER TANK CAP IF THE ENGINE IS HOT. STEAM AND HOT COOLANT MAY SPURT OUT AND CAUSE INJURY. TIGHTEN THE HEADER TANK CAP SECURELY AFTER BEING REMOVED. STEAM CAN SPURT OUT DURING ENGINE OPERATION IF THE CAP IS LOOSE.

- The pressurised header tank should be mounted higher than the level of the engine, no less than 300mm, and no more than 1m from the engine, to prevent cooling system air locks.
- Shire 39, 43 & 49: Two hoses are used on these engines. One is fitted between the smaller internal diameter (3mm) outlet (on the left hand side of the tank) and the connection on the top of the thermostat housing. The second hose is connected between the larger internal diameter outlet on the right hand side of the tank and the ½“ hosetail connection on the engine pipe facing forwards and upwards at 45°. The hoses **MUST** be connected correctly
- The connections for the Header Tank are shown on (**Figure 15**)
- A constant rise on pipework is required to prevent air locks

	Connections on Engine	Connections on Header Tank
Shire 39, 43 & 49	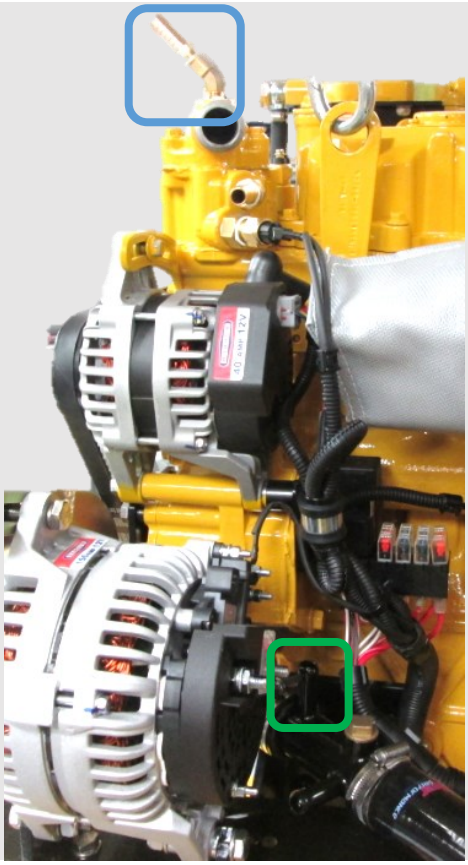	

Figure 15: Header Tank Connections

7. Calorifier

- The temperature of coolant flowing to the calorifier from the engine can be between 85 and 90°C. A blender valve must be incorporated in the calorifier / hot water system outlet to lower the hot water temperature for domestic use.
- The hose connections for the calorifier are for a ½" internal diameter hose.
- The connections for the calorifier are shown on (***Figure 16***)

	Calorifier Connections on Engine
Shire 39, 43 & 49	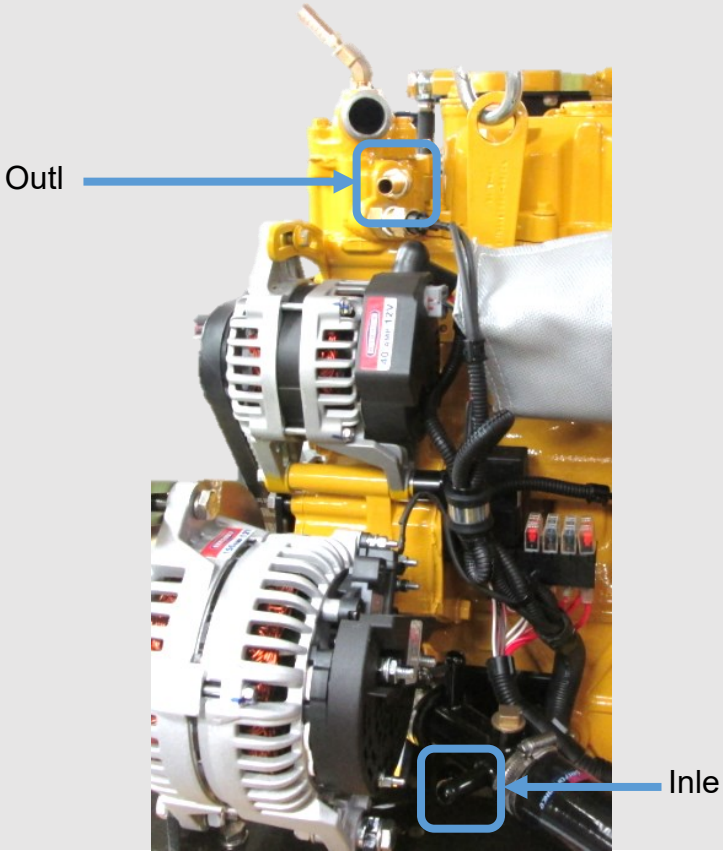

Figure 16: Calorifier Connections

8. Shaft Connection and Propeller Selection

- Some type of flexible coupling must be used to connect the gearbox output flange to the propeller shaft flange.
- Please note, underperforming engines will not be covered under warranty if the cause of the poor performance is found to be the use of an inappropriate propeller.

9. Engine Anti-Vibration Mounts

- Ensure that the engine feet do not end up at the top of the thread on the engine mounts, this puts undue pressure on them and can result in excessive engine movement and premature mount failure. If this is a problem put steel packing plates under the mounts. Packing plates 25mm thick are available: Order RDG3906 Engine mount spacer. Alternatively they can be manufactured locally.
- Ensure that the engine has been installed for at least 24 hours before shaft alignment is checked, to allow the mounts time to settle under the engine weight.
- Ensure that the anti-vibration mount centre screw is sufficiently raised so as not to touch the engine bed. If this occurs, excessive engine vibration will be experienced through the hull.
- For best results, fit the front AV mounts into the front holes in the engine rails. If the

engine room space is a problem the mounts can be fitted slightly further back in the alternative holes and the front of the rail cut off – leaving 50mm of material to retain strength (measuring from the centre of the mount hole to the front end of the rail). Note: This procedure is only possible on non- 'E' Kit engines and may result in a very slight increase in vibration. AV mount installation points are shown on (**Figure 19**)

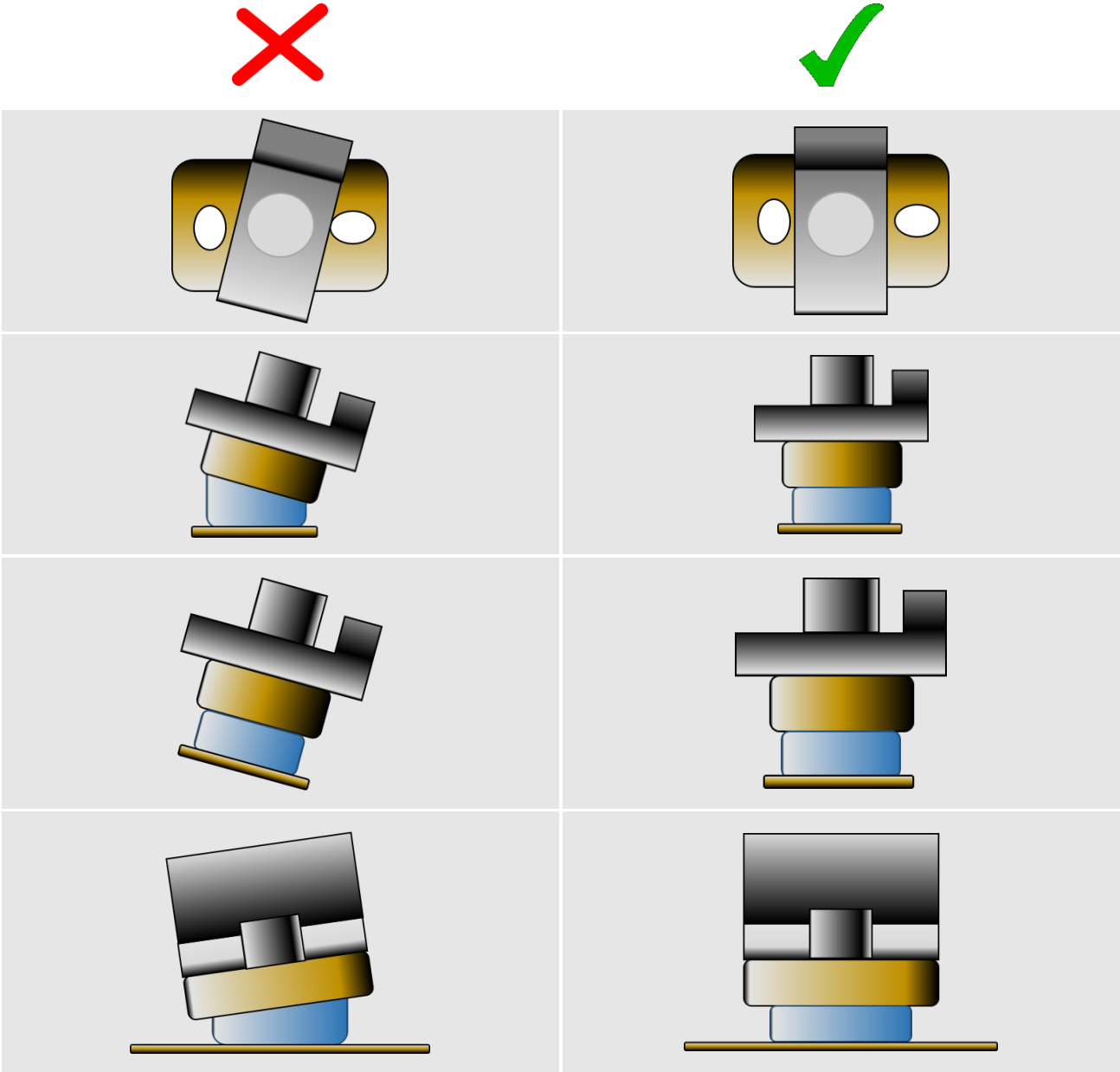

Figure 17: Correct Anti-Vibration Mount Installation

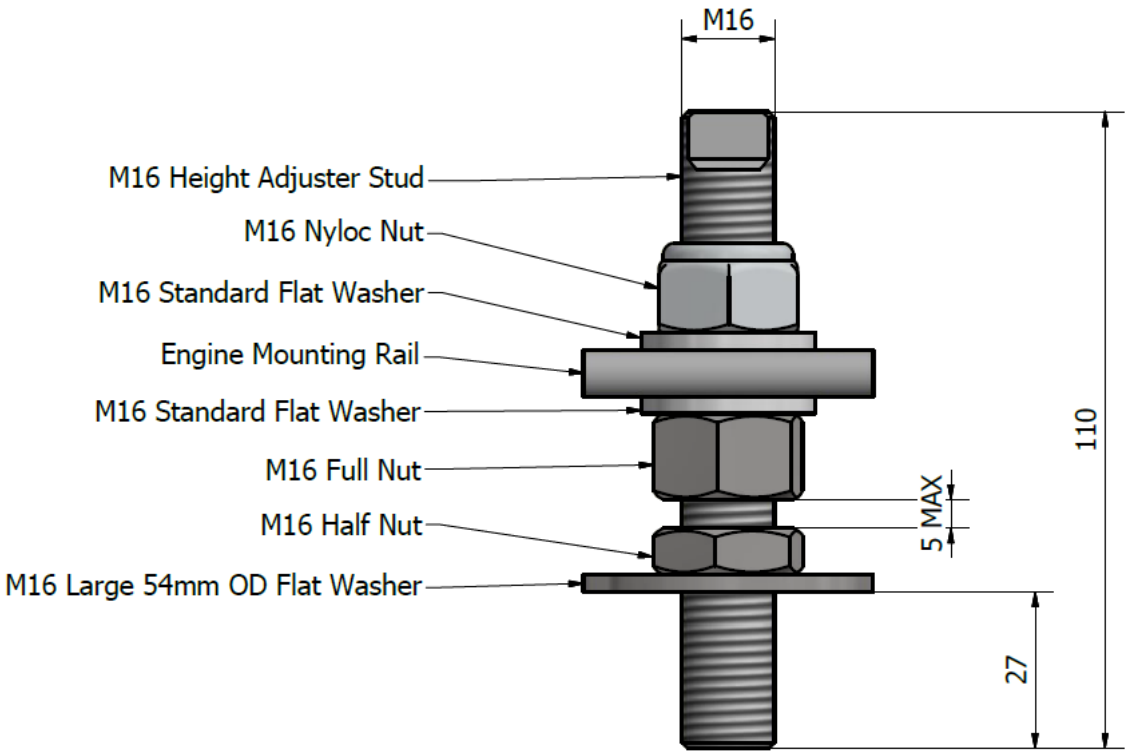

Figure 18: Correct Anti-Vibration Mount Installation

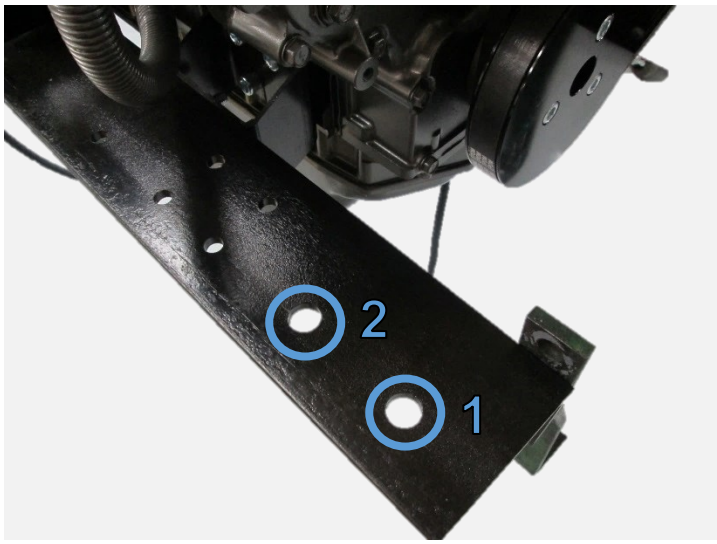

	Description
1	Normal mounting position
2	Alternative mounting position if engine compartment space is restricted

Figure 19: Anti-Vibration Mount Installation Points

10. Engine Alignment

- The gearbox output shaft flange and propeller shaft input flange must be almost perfectly aligned. A maximum of 0.05mm (0.002”) misalignment in any plane is acceptable. Ensure alignment is recheck after the first 4 hours of running, after the first month and thereafter annually.
- If the engine is out of alignment it will result in excessive vibration and possible damage to the stern tube and propeller shaft.
- Boats that are fitted with fully flexible drive couplings should still have the engine and shaft alignment as close as possible. A dummy shaft may be required for this purpose.

Some types of flexible shaft couplings require the input and output to be misaligned, check with the coupling manufacturer’s installation instructions.

- Minimum clearance of 25mm between rails and engine beds.

11. Engine Inclination

- The engine installation angle is the angle of the crankshaft centre to the water line (**Figure 20**).
- The propulsion efficiency decreases as the engine installation angle increases.
- The **maximum** engine installation angle is 15°

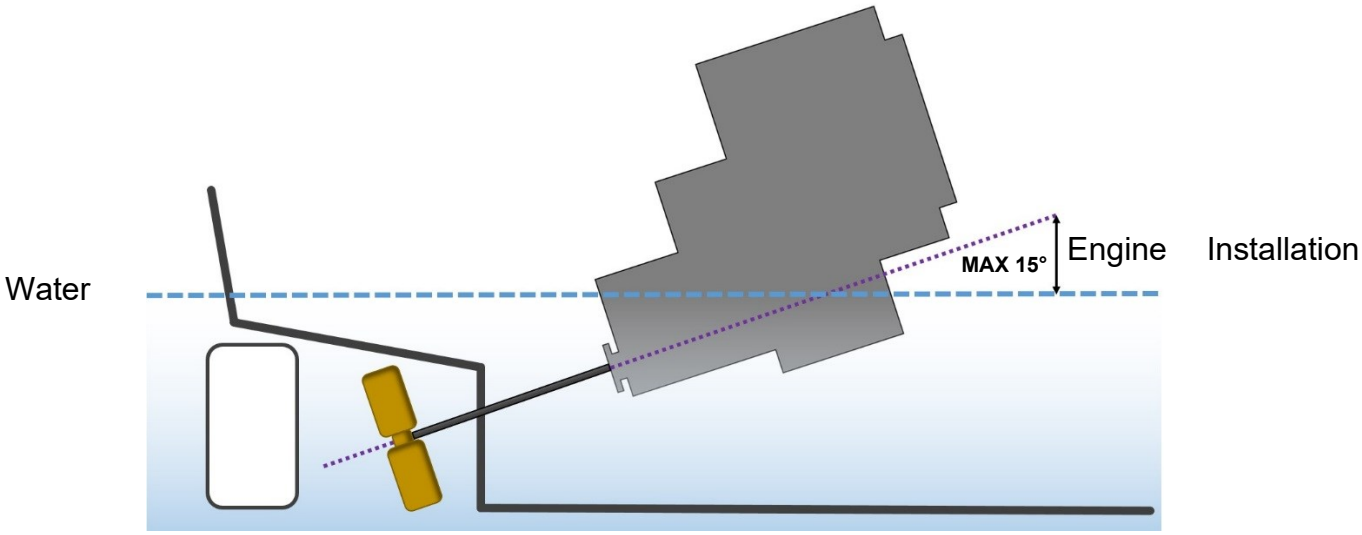

Figure 20: Maximum Engine Installation Angle

12. Electrics

CAUTION

- Do not attach any part, hose or cable to the engine wiring harness. There is a warning label attached to the harness to remind you of this.
- Connect the wiring extension harness multi plug to the panel plug and the other end to the engine.
- Connect the start battery positive cable to the separate terminal post marked +.
- The starter motor battery cable must have a cross sectional area of at least 50mm^2.
- For twin alternator engines, connect the domestic battery positive cable to the 125A, 150A, 170A or 240A Alternator. The 125A, 150A and 170A alternator have a B+ terminal and the 240A alternator has a “pos out” terminal (see wiring diagram). This ensures that the 40A alternator charges the start battery and the 125A, 150A, 170A or 240A alternator charges the domestic battery. This removes the requirement for a split charging system or relay.
- The engine is supplied with the domestic alternator belt not fitted. This is so that domestic alternator damage does not occur if the engine is run without the domestic battery back connected. The belt should only be fitted when the domestic battery bank has been connected to the domestic alternator. Belt fitting and tensioning instructions are in **Section 7 – Service Procedure**. Make sure the alignment is correct.
- A cable will need to be manufactured locally and fitted between the lower 150A or 170/240A alternator and domestic battery positive terminal. The cable should have a minimum cross-sectional area of:

	Cross Sectional Area
Shire 39, 43 & 49	40mm² (125/150A Alternator)
Shire 39, 43 & 49 (Option)	70mm² (170/240A Alternator)
24v 120amp Alternator	40mm²

- Both negative battery terminals can be connected to a common earth point.

Note: The 240A alternator is of the insulated earth design and requires a heavy-duty earth cable installed at all times.

Note: If an optional larger output alternator is fitted to either a new engine, or fitted to an old engine as an upgrade, ensure that all cables, master switches, terminals, split charge relays etc. are of sufficient capacity for the increased current.

13. Electrical Options

DANGER:

ELECTRIC SHOCK RISK!

- If the engine is fitted with the optional 230V 'E' Kit System, refer to the manual supplied with it for correct wiring, control box installation and operation.
- The Shire range can be supplied with other optional additional 12V, 24V or 48V alternators. This will be supplied fitted but not wired. It is the responsibility of the boat builder to ensure that this is correctly wired to the boats electrical system.

14. Engine Oil

WARNING:

BURN HAZARD! WAIT UNTIL THE ENGINE COOLS BEFORE YOU DRAIN THE ENGINE OIL. HOT ENGINE OIL MAY SPLASH AND BURN YOU.

NOTICE:

ENGINE OIL WITH A HIGHER API CLASS THAN CD IS UNSUITABLE FOR CANAL BOAT OPERATION AND WILL CAUSE ENGINE DAMAGE IF USED.

- All Shire engines are supplied fully run in.
- Check oil levels in engine and gearbox before starting
- Use good quality engine oil SAE 15W / 40 API class CH-4 or CF-4

15. Fuel

WARNING:

DIESEL FUEL IS FLAMMABLE AND EXPLOSIVE UNDER CERTAIN CONDITIONS.

WARNING:

DIESEL FUEL IS HARMFUL TO SKIN. MAKE SURE THE RELEVANT PERSONAL PROTECTION EQUIPMENT IS WORN.

- Ensure the main fuel tank is clear of dirt and water.
- A separate water trap must be fitted to all engine installations. The Shire 39,43 & 49 engines are supplied with an additional fuel pre-filter water trap as standard.
- Connect fuel feed return hoses from engine to main supply and return lines to main fuel tank, ensuring they are connected the correct way around. The hose to the electric fuel pump is the inlet.
- The engine hoses are supplied with 8mm (5/16”) OD metal hosetails and should be securely fitted to the main supply and return pipes with compression fittings.
- The engine hoses should have sufficient slack to absorb engine movement without placing strain on the hoses and be securely clipped to prevent accidental damage and chafing.
- Initially fill the fuel system by turning the ignition on to operate the electric fuel pump. Loosen the bleed screw on the top of the primary fuel filter / water trap and close when fuel begins to flow clearly (no bubbles). The rest of the process is done automatically by the engine. It is rarely necessary to bleed the injection pump or injectors upon installation as the engine will already have fuel in it from the engine run in and test procedure.

16. Coolant

WARNING:

SCALD HAZARD! NEVER REMOVE THE COOLANT BOTTLE CAP IF THE ENGINE IS HOT. STEAM AND HOT COOLANT WILL SPURT OUT AND CAUSE INJURY. TIGHTEN THE CAP SECURELY AFTER BEING REMOVED. STEAM MAY SPURT OUT DURING ENGINE OPERATION IF THE CAP IS LOOSE.

WARNING:

BURN HAZARD! WAIT UNTIL THE ENGINE COOLS BEFORE YOU DRAIN THE ENGINE COOLANT. HOT ENGINE COOLANT MAY SPLASH AND BURN YOU.

WARNING:

BURN HAZARD! A WATER COOLED EXHAUST MANIFOLD IS HOT AND MAY BURN YOU.

- Prepare coolant mix of 50% clean tap water and 50% antifreeze.
- Open the calorifier taps (if fitted) to fill the calorifier system and displace air.
- To fill the cooling system for the first time, fill the boat skin via the inlet hose connection or filler plug if fitted.
- Shire 39, 43 & 49: Fill the engine through the white plastic expansion tank.

After running the engine for the first time, stop the engine and monitor the water level frequently as trapped air bubbles may be expelled. Top up the system as necessary.

17. Control Cables

- Connect engine speed control cable. With the engine off, ensure that the engine speed control lever achieves full travel from idle to full speed. Adjust if necessary.
- Check the gearbox shift lever selects positively and that the drive direction corresponds with the gearshift control lever. Ensure that the gearbox control lever and the gearshift lever are both in neutral before connection. Adjust if necessary.

18. Domestic Battery Bank

DANGER:

EXPLOSION HAZARD! NEVER SHORT OUT THE BATTERY TERMINALS, INCLUDING WHEN CHECKING THE REMAINING BATTERY CHARGE THIS WILL RESULT IN A SPARK AND MAY CAUSE AN EXPLOSION OR FIRE.

WARNING:

BURN HAZARD! BATTERIES CONTAIN SULPHURIC ACID. NEVER ALLOW BATTERY FLUID TO COME IN CONTACT WITH SKIN, EYES OR CLOTHING. SEVERE BURNS COULD RESULT. MAKE SURE THE CORRECT PERSONAL PROTECTION EQUIPMENT IS WORN.

Domestic battery banks that are too large create excessive loads on the domestic alternator. Alternators running at maximum output for prolonged periods of time will eventually fail prematurely; alternators that fail due to the battery bank being over the maximum recommended size will not be covered by warranty.
Higher output additional alternators, or 'E' kits are available: if larger battery banks are required discuss your individual power requirements with the boat builder or engine supplier.

- The maximum domestic battery bank is calculated using the following:
  - Live aboard, three times domestic alternator, maximum output current.
  - Weekend cruising or hire fleet use, three and a half times domestic alternator, maximum output current.

Example 1:
Live aboard application fitted with a 150amp domestic alternator
3 x 150 = 450 ampere/hour maximum battery bank size

Example 2:
Weekend cruising or hire fleet application fitted with a 240amp domestic alternator
3.5 x 240 = 840 ampere/hour maximum battery bank size.

The standard alternators fitted to Shire engines are not suitable for charging lithium-ion batteries. If the standard alternators are used for charging lithium-ion batteries, they will not be covered under warranty. If lithium-ion batteries are to be used a specialist alternator will be required.

19. Control Panel

CAUTION

All Shire engines are supplied with an engine control panel that shows RPM and hours run and include warning lights and a warning buzzer. The deluxe panels also have additional gauges for the water temp, oil pressure and battery charging. The panels are designed to be splash proof and are correctly installed with the gauges vertical. Do not install so that they remain out in the open, or cover up when not on use.
The control panel engine tachometer is supplied already calibrated to measure correct engine speed. If a new control panel, tachometer or alternative alternator is fitted, the tacho will require re-calibrating.

Control Panel Calibration Procedure:

- Connect control panel plug to engine wiring loom plug.
- Turn ignition on (do not start engine).
- Press and hold black button on rear of tacho until “H-“appears on the digital display at the bottom of the tacho (on the front).
- When pressing and holding the black button on rear of tacho, the value displayed will increase / decrease until the button is released. Then when pressing again it will increase / decrease in the other direction. Keep doing this until the digitally displayed value on the bottom of tacho reaches the correct value, according to the type of alternator (see below table). This must be set to the alternator with blue and black wire connected to it.
- Confirm settings to tacho meter reader.
- An optical tachometer is required to check the reading.

Barrus Alternator (Amps)	Barrus Tacho reading
40	10.50 – 11.00
150	19.50 – 20.00
240	22.00

Alternative or non-standard alternators will require calibrating and checking by trial and error, with a hand held tacho until the engine speed and indicated tachometer speed are the same.

20. Exhaust System

WARNING:

EXHAUST HAZARD! NEVER OPERATE ENGINE WITHOUT PROPER VENTILATION. NEVER BLOCK VENTS OR OTHER MEANS OF VENTILATION. ALL COMBUSTION ENGINES CREATE CARBON MONOXIDE GAS DURING OPERATION. ACCUMULATION OF THIS GAS COULD CAUSE ILLNESS OR EVEN DEATH.

WARNING:

BURN HAZARD! THE EXHAUST MANIFOLD IS HOT AND MAY BURN YOU.

WARNING:

ENSURE EXHAUST SYSTEM HAS COOLED DOWN AND APPROPIATE PPE (GLOVES, MASK, SEALED GOGGLES) IS WORN WHEN WORKING ON THE EXHAUST SYSTEM.

If replacing Exhaust Manifold Blankets, ensure appropriate PPE is worn. Exhaust Blanket part numbers are available in the Part Manuals for the engine

The exhaust outlet size on the engine is 1½” BSP female. There must be a flexible exhaust hose of suitable exhaust grade between the engine and the silencer or hull outlet. The outlet must be above the waterline at all times. The exhaust fittings and silencer (if fitted), must not be smaller than 1½” BSP. Exhaust silencers, flexible exhaust hose connections and lagging blanket are all available as optional extras:

Part Description	Part Number
Exhaust Coupling 1½” x 1½” BSP	RDG1916
Exhaust Silencer DSA-38	RDG1911
Flexible Exhaust Hose (18”)	RDG1879
Blanket 18” Flexy Exhaust	RDG2477
Hospital Silencer 1½“ BSP	RDG6536
1 ½”F x 1 ½”F BSP 90 Elbow	RDG5898

Make sure the exhaust increases then decreases in height as shown in (**Figure 21**).

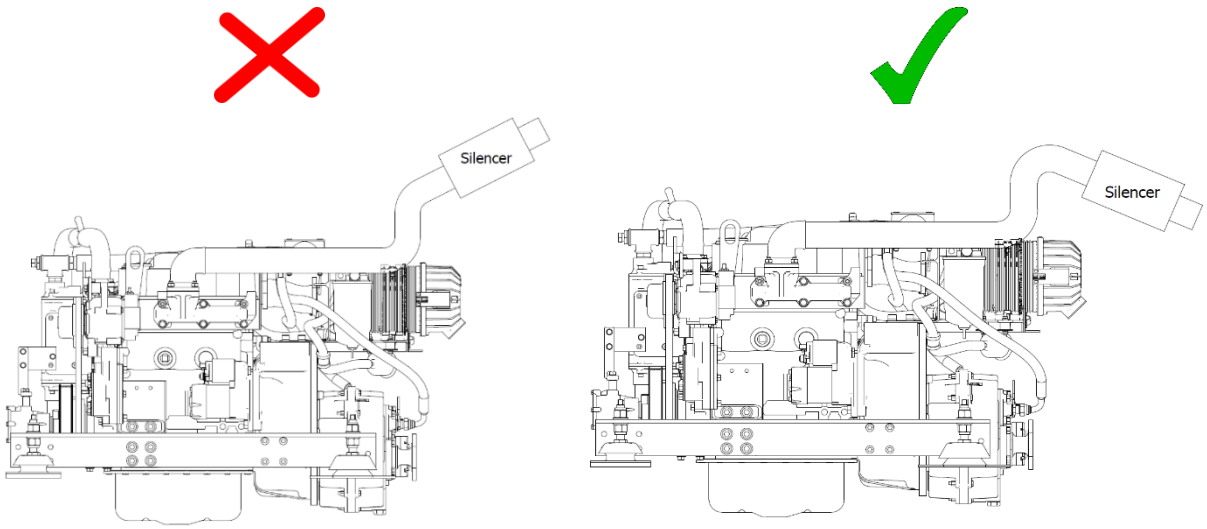

Figure 21: Correct Exhaust Installation

21. Hydraulic Drive Transmissions

If an engine is to have a hydraulic drive transmission attached to it instead of a conventional marine gearbox, a number of points must be observed.

- Bobtail engines (i.e. Engines supplied without a marine gearbox), normally do not have a gearbox oil cooler fitted. However if a cooler is supplied, this will only be suitable to cool a conventional marine gearbox.
- Hydraulic drive transmissions generate far more heat than a conventional marine gearbox. Therefore, the size of the oil cooler installed must be calculated by the hydraulic drive transmission supplier. This is to ensure it has sufficient cooling capacity and is sized appropriately taking into account:
  - Maximum engine power.
  - High ambient summer air temperature.
  - Summer River/Canal/Sea temperature.
  - No additional restriction to engine coolant flow is present.

Skin tanks will also need to be increased by up to approx. 10% to dissipate the additional heat generated, when a hydraulic drive system or hydraulic bow thruster is used.

Or

An additional separate skin tank of suitable capacity with separate water circulating pump may need to be fitted for a hydraulic drive transmission.

Hydraulic oil coolers should be installed after the engine, not before. Coolers that are installed before the engine will invalidate the engine warranty.

22. Centa Coupling CF-M-160 (RDG2779)

Centa have given Barrus permission to use the following instruction on how to fit the coupling: When assembling the coupling all the bolts and nuts must be tightened to the correct torque using a torque wrench. Tightening by “feel” will not give a satisfactory result.

- Remove the clamping bush from the coupling.
- Degrease the propeller shaft and the bore of the clamping hub. Leave the special grease only in the tapered bore of the coupling hub, and on the outside of the clamping hub. **DO NOT USE SOLVENTS.**
- Mount the coupling onto the gearbox output flange. Note: The M10 tapped holes in the coupling are 15/17mm, so care must be taken to use screws or studs of the correct length. Centa recommend the use of M10 x 25 screws or M10 x 40 studs. If using studs the shorter (10mm) screwed portion should be inserted into the coupling. **TIGHTENING TORQUE IS 45Nm**
- Push the clamping hub fully onto propeller shaft.
- Connect the clamping hub/propeller shaft onto the coupling. The connecting screws of the clamping bush must be tightened alternately in several steps until the required tightening torque is reached. Finally, the tightening torque of all fasteners must be checked all round. **TIGHTENING TORQUE (M12x40) is 79Nm**

The tightening of the connecting screws between the clamping bush and the hub means that the clamping hub/propeller shaft will be dragged into the coupling by a few millimetre’s, thereby effectively shortening the installation length. Sufficient free space (minimum 10mm) should be available between the outer bearing and the propeller hub.

The propeller-thrust (or propeller-pull in reverse drive) is safely transmitted via the coupling from the propeller shaft to the gearbox, but the design of the coupling is such that the rubber must be compressed when sailing in the forward direction. The coupling is not suitable for use with vee-drive gearboxes having outputs of the quill-shaft arrangement where the coupling would be subject to a pulling force when sailing forward.

The coupling uses a bonded rubber element, and care should be taken not to contaminate the rubber by indiscriminate use of solvents or anaerobic liquids.

23. PRM 280DP Gearbox with Power Take Off (Optional Extra)

The PRM 280 with power take off is designed for driving hydraulic pumps made to SAEJ77 Series B specification. The maximum power which can be transmitted is 22kW (29.5hp) per 1000rpm.

The power take off operates in the opposite direction to the gearbox input shaft. The output of the live power take off is the same speed as the engine.

24. Engine Start Battery

For the required specification of the Engine Start Battery, please refer to **Section 10 – Technical Data.**

25. Additional Wiring Connection

An additional grey wire tag is fitted which is found coming out of the loom near the relay. This is live only when the ignition is energised and can be used to trigger a circuit that may be required to operate only when the engine is running such as a bow thruster, calorifier / heating system circulation pump, engine cover microswitch operated magnet, etc. This wire is labelled on the wiring loom diagram as “Not Connected”.

Note, this wire should only be used to operate an electrical relay in conjunction with a separate fused supply.

26. Installation Check List

	Please tick box ✔
Engine alignment correct, clearance all round, check propeller turns by hand (Ensure ignition is off battery and battery master switch is off)	
Anti-Vibration mounts correct height, spacers if necessary. Make sure all nuts are tight	
Exhaust system as specified	
Check the correct size of start battery has been fitted	
Battery leads are of correct size, tightened and start battery is charged	
Check tension of alternator belts, wiring connected and belt alignment checked if removed	
Check fuel system is connected correctly and primed	
Fuel line water trap installed and water drained off	
Check header tank and skin tank connections are correct way round, constant pipework rise to header tank	
Check level of coolant in header tank and correct ratio of antifreeze to water	
All air has been bled from skin tank, calorifier and pipework	
Engine and gearbox oil levels are as specified	
Throttle and gear cables correctly adjusted and operating smoothly	
All pipework and cabling supported and not chaffing, slack to allow movement of engine	
Engine control panel installed in a position where it is not out in the open	
Confirm engine control panel, gauges and warning lights are all operational	
Run the engine for 20 minutes with the boat tied up and in gear (at ½ speed). Check for leaks and that all systems operate correctly	
Check & Set the Engine Idle Speed to 875 rpm (when warm)	
Check for leaks	
Explain/Demonstrate daily/weekly/periodic maintenance checks	
Explain/Demonstrate off season storage and maintenance	
'E' Kit 230v AC systems installed by qualified electrician and to BMEA code of practice for Electrical and Electronic installation in Boats: BS EN ISO 13297 (ac)	
Installer's signature	
Installer name/company	

SECTION 6 – Operation

NOTICE:

REFER TO THE SHIRE MANUAL PRIOR TO STARTING THE ENGINE.

1. Starting the engine for the first time

- Remove ignition key.
- Ensure all oil and coolant levels are checked.
- Ensure both the engine and domestic batteries are connected. Both battery master switches must be turned on. Failure to do so may damage the domestic alternator.

2. Starting Procedure

- Ensure there is no one in the engine compartment.
- Ensure the engine compartment door is closed.
- Ensure the gearshift control level is set to neutral and that all persons are clear of any moving parts.
- Insert ignition key.
- Turn key to on position. The glow plug light will illuminate.
- Observe warning lights (and gauges on deluxe panel). Note: The engine water temperature overheat warning light will only come on for a brief period of time when the ignition is first turned on as a bulb check. It will then only illuminate in the case of the engine coolant temperature exceeding the maximum safety level.
- Wait for the glow plug light to go out.
- Turn key to start and hold to crank.
- Crank the engine for no more than 15 seconds.
- Upon engine start, immediately release the key.
- Key will return to on position.
- The warning buzzer will stop and on the deluxe panel, the oil pressure gauge will show an oil pressure of 2.5 - 3.5 bar (36 - 51 psi).
- Should any warning light not go out, or if there is no reading on the oil pressure gauge, the buzzer will continue sounding. In this case, stop the engine immediately and check the relevant system (Note: If the charge light does not go out, briefly increase the engine speed).
- Stop engine if any abnormal noises are detected.
- Visually check the engine for oil, fuel and coolant leaks, after initial start-up and at regular intervals. Note: Engine must be stopped, with ignition key removed, to carry out this check.

3. Stopping Procedure

- Move speed control lever to idle position.
- Turn key to off position.

4. Full Load Running

- Running diesel engines near there rated output (maximum load) regularly will disperse accumulated carbon and condensation, enhancing engine life and reducing emissions.
- Running the engine at, or near maximum speed whilst in gear may not be possible on inland waterways with speed limits in place. If this is possible, ensure that the water is deep enough not to damage the propeller. It is recommended that the engine is run at or near full load for 15 minutes (maximum revs, in gear) every 50 hours.

5. Refuelling

WARNING:

DIESEL FUEL IS FLAMMABLE AND EXPLOSIVE UNDER CERTAIN CONDITIONS.

WARNING:

DIESEL FUEL IS HARMFUL TO SKIN. MAKE SURE THE RELEVANT PERSONAL PROTECTION EQUIPMENT IS WORN.

- All Shire canal boat engines run on diesel fuel.
- Please note that when the vessel is to be left for any period of time, the fuel tank should be left full to eliminate the build-up of condensation and formation of water in the fuel tank.
- Engine to be turned off while refuelling
- The fuel type for all Shire canal boat engines is diesel. **DO NOT USE BIODIESEL.**

6. Diesel Fuel Additive

The use of diesel fuel additive is recommended on Shire engines. The quality of the fuel available when cruising is often unknown. Also the fuel may have been in storage for long periods of time. The use of additives will ensure that your engine fuel injection system is in top condition which should result in many years of smooth reliable operation, without the cost and inconvenience of expensive breakdowns due to poor quality fuel. It has also been found that improvements in fuel consumption and start ability are an added benefit of using this product. Diesel fuel additive is available from your Shire dealer in a handy 500ml container, Part Number RDG80210219.

7. Exhaust Back Pressure

The back pressure falls within the manufacturers recommended range when using the optional exhaust system (see **20. Exhaust System** from **Section 5 – Installation**) with the engine.

8. Hybrid System (For engine with Hybrid System fitted)

Refer to the separate Hybrid Operation Manual for more details on the system.

9. Single Shift Control Lever Side Mount Operation - Optional (RDG9210055)

To engage forward or reverse gear:

- Lift the safety latch under the handle before shifting.

To rev the engine in neutral:

- Pull the lever out sideways from the main body.
- Lift the safety latch under the handle then shift.

SECTION 7 – Service Procedure

NOTICE:

REFER TO THE MANUAL PRIOR TO CARRYING OUT ANY SERVICE OR MAINTENANCE WORK.

WARNING:

PRIOR TO CARRYING OUT ANY SERVICE OR MAINTENANCE WORK MAKE SURE THE RELEVANT PERSONAL PROTECTION EQUIPMENT IS WORN.

1. Engine Oil and Filter Change

WARNING:

BURN HAZARD! WAIT UNTIL THE ENGINE COOLS SLIGHTLY BEFORE YOU DRAIN THE ENGINE OIL. HOT ENGINE OIL MAY SPLASH AND BURN YOU.

- Change the engine oil while the engine is still warm.
- Remove the blanking plug in the sump pump spout (6mm Allen key).
- Place a plastic tube over the spout and into a container. Operate the pump handle to empty the sump. Note: Remember to refit the blanking plug afterwards.
- Place a drip tray under the engine to catch the small amount of oil that will escape from the oil filter. Using the strap type oil filter removal tool supplied with the engine, slacken the filter from the engine block in an anti-clockwise direction. Remove the tool and spin off the filter.
- Lightly oil the new filter O ring seal and install the filter onto the engine. Spin it on in a clockwise direction and finally tighten by hand only as firmly as you can.
- Refill the sump using the orange oil filler cap in the rocker cover on top of the engine.
- Oil level should be to the top mark on the dipstick.
- Run the engine for 5 minutes before checking the oil level with the dipstick and top up if required.
- Do not exceed the maximum oil level marker as this may cause damage to the internal components of the engine.

2. Air Filter Check and Change

- Release the two spring clips. Pull off the end cover to reveal the filter element. The element simply pulls out.
- To fit the new element, slide the open end of the filter element into the main body. Gently push the element until fully seated. Refit the end cover.
- The air filter is constructed from pleated paper. Inspect it closely for dust or dirt. The air filter cannot be cleaned and must be replaced when dirty. The engine requires clean unrestricted air to run efficiently. Failure to maintain the air filter could result in smoke, increased fuel consumption and ultimately engine damage.

3. Gearbox Oil Change

WARNING:

BURN HAZARD! WAIT UNTIL THE GEARBOX COOLS SLIGHTLY BEFORE YOU DRAIN THE GEARBOX OIL. HOT OIL MAY SPLASH AND BURN YOU.

Some engines will have a gearbox sump pump fitted. To change the oil in this circumstance, follow the same procedures as were outlined for changing the engine oil. For engines without a gearbox sump pump follow the procedure below.

- Change the gearbox oil while it is still warm (Please refer to the gearbox manual for more information).
- Place a tray beneath the gearbox that will hold at least 2 litres.
- Remove the drain plug and allow 5 minutes for the oil to drain thoroughly.
- Replace the drain plug. Ensure that the sealing washer (if used) is still in place and in good condition before tightening. Fit a new washer if required.
- Refill the gearbox with oil to the upper mark on the dipstick. Screw the dipstick in fully, to establish level. Refer to the PRM owner manual for more details. **Section 8** in this Shire manual contains details of oil specifications.
- Do not overfill the gearbox as this can damage the internal components.

Gearbox Model	Location of Dipstick / Filler Plug / Drain Plug
PRM 125	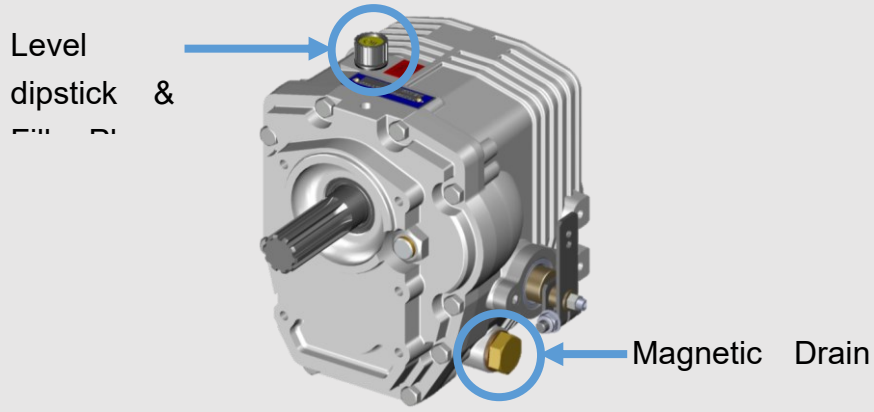
PRM 150	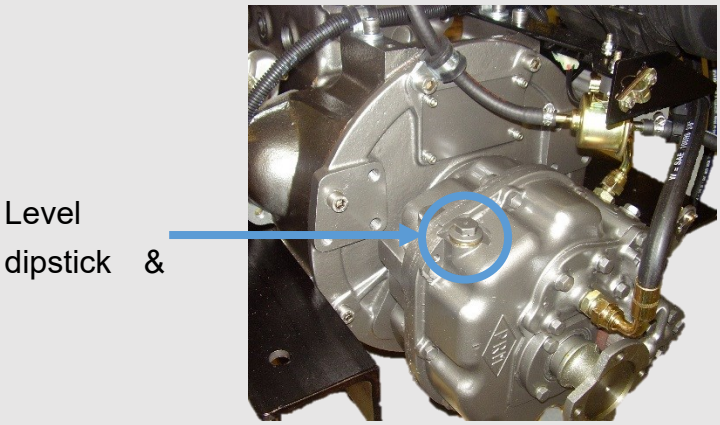
PRM 280	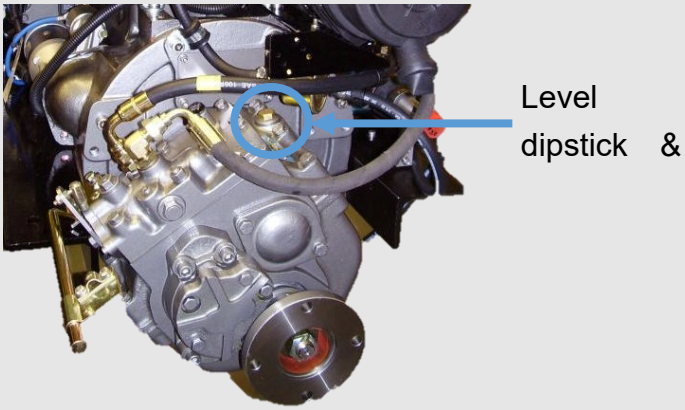

Figure 22: Location of Dipstick / Filler Plug / Drain Plug on Gearbox

4. Disposal of Oil and Related Items

NOTICE:
ALWAYS BE ENVIRONMENTALLY RESPONSIBLE.

- Please dispose of used oil and oil filters safely with due regard for the environment and take to your local waste oil disposal point.
- Do not allow oil or contaminated parts to enter the inland water way system.

5. Primary Fuel Filter Drain – Shire 39, 43 & 49

WARNING:
DIESEL FUEL IS FLAMMABLE AND EXPLOSIVE UNDER CERTAIN CONDITIONS.

WARNING:
DIESEL FUEL IS HARMFUL TO SKIN. MAKE SURE THE RELEVANT PERSONAL PROTECTION EQUIPMENT IS WORN.

- Place a small drain bowl under the primary fuel filter / water trap.
- Loosen the drain screw located in the bottom of the fuel filter / water trap (**Figure 23**)
- Drain off any water.
- Once the water has been drained, retighten the drain screw.
- It is unlikely the complete fuel system will require bleeding.
- Run for 5 minutes.
- Check that the drain union is tight and that there are no leaks.
- Do not over tighten the drain screw.

The boat builder should have fitted an additional water trap in the fuel system. Ensure that this is drained regularly.

Figure 23: Primary Fuel Filter Drain Screw

6. Primary and Secondary Fuel Filter Change

DANGER:

DIESEL FUEL IS FLAMMABLE AND EXPLOSIVE UNDER CERTAIN CONDITIONS.

WARNING:

DIESEL FUEL IS HARMFUL TO SKIN. MAKE SURE THE RELEVANT PERSONAL PROTECTION EQUIPMENT IS WORN.

- Ensure the fuel tank is at least ¾ full prior to undertaking this procedure.
- Turn off the main boat fuel supply tap. This is located on or near the fuel tank.
- Place a small drip tray under the filter body.
- Remove the fuel filters using the filter strap wrench supplied. Unscrew them until loose then remove by hand.
- Primary fuel filter only: Retain the metal fuel filter drain screw from the old filter and reuse in the new filter. The part number for the drain screw is RDG9189022.
- Smear a small amount of clean fuel on all of the O ring seals that are supplied with the

new filter element.

- Screw the new element back into the filter head. Tighten by hand only.
- Turn the main boat fuel supply tap back on.
- Ensure the system is correctly bled before attempting to start up.

The same procedure is used for both the primary and secondary fuel filter changes.

7. Fuel System Bleeding

DANGER:

DIESEL FUEL IS FLAMMABLE AND EXPLOSIVE UNDER CERTAIN CONDITIONS.

WARNING:

DIESEL FUEL IS HARMFUL TO SKIN. MAKE SURE THE RELEVANT PERSONAL PROTECTION EQUIPMENT IS WORN.

- Ensure the fuel tank is at least ¾ full prior to undertaking this procedure.
- Open the bleed screw on top of the engine fuel filter (**Figure 24**).
- Operate the electric fuel pump by turning the ignition on.
- After the fuel filter has been purged of air, close the bleed screw.
- Undo **ALL** the injector pipe connections.
- Crank the engine over with the starter motor. When fuel can be seen, stop cranking.
- Tighten the injector pipe connections.
- Wipe off any excess fuel.
- Crank the engine.
- The engine should now start. If it does not start, repeat the above procedure.
- Check for any leaks and clean up any spilt fuel.

If the fuel filter are the only items being replaced, the injector pipes many not require bleeding.

Figure 24: Fuel Filter Bleed Screw

8. Cooling System

DANGER:

SCALD HAZARD! NEVER REMOVE THE COOLANT PRESSURE CAP IF THE ENGINE IS HOT. STEAM AND HOT COOLANT WILL SPURT OUT AND SERIOUSLY BURN YOU. TIGHTEN THE CAP SECURELY AFTER BEING REMOVED. STEAM CAN SPURT OUT DURING ENGINE OPERATION IF THE CAP IS LOOSE.

WARNING:

BURN HAZARD! WAIT UNTIL THE ENGINE COOLS BEFORE YOU DRAIN THE ENGINE COOLANT. HOT ENGINE COOLANT MAY SPLASH AND BURN YOU.

- To check the coolant level, ensure that the engine has been shut down for at least half an hour.
- The coolant level can be checked visually and should be between the two level marks formed on the front of the white plastic expansion tank.
- If required, top up the level with coolant (50% clean tap water and 50% ethylene glycol based anti-freeze) through the expansion tank filler cap.
- Do not use water only to top up as this weakens the coolant mix, reducing the level of frost protection and anti-corrosion protection of the coolant.

9. Belt Adjustment

WARNING:

SEVERE HAZARD! KEEP HANDS AND OTHER BODY PARTS AWAY FROM MOVING/ROTATING PARTS. WEAR TIGHT FITTING CLOTHING AND KEEP YOUR HAIR SHORT OR TIE BACK. REMOVE ALL JEWELLERY BEFORE COMMENCING WORK. CHECK BEFORE STARTING THE ENGINE THAT ANY TOOLS OR RAGS USED DURING MAINTENANCE HAVE BEEN REMOVED FROM THE AREA.

- Ensure the ignition key is removed before carrying out any adjustments.
- Turn the battery master switch to the off position before carrying out any adjustments
- Depress the longest run of the drive belt to be checked. If the travel exceeds 15-20mm using hard finger pressure, the belt needs re-tensioning.
- Loosen the upper adjuster on the alternator. Loosen the lower mounting pivot nut and bolt. Pull out either using hand pressure or using the tensioning screw, depending on which alternator belt is to be tensioned.
- Pull the alternator away from the engine to tighten the belt.
- Hold the alternator in position and retighten all the bolts

If the belts are over tightened, alternator bearing failure will occur.

10. Belt Maintenance

WARNING:

SEVERE HAZARD! KEEP HANDS AND OTHER BODY PARTS AWAY FROM MOVING/ROTATING PARTS. WEAR TIGHT FITTING CLOTHING AND KEEP YOUR HAIR SHORT OR TIE BACK. REMOVE ALL JEWELLERY BEFORE COMMENCING WORK. CHECK BEFORE STARTING THE ENGINE THAT ANY TOOLS OR RAGS USED DURING MAINTENANCE HAVE BEEN REMOVED FROM THE AREA.

- Ensure the ignition key is removed before carrying out any maintenance.
- Turn the battery master switch to the off position before carrying out any maintenance.
- Do not allow oil to contact the belt. Oil attacks the construction of the belt. This reduces

the drive efficiency and will cause it to fail prematurely.

- Replace the belt if it cracks or splits and as the adjustment nears the limit of travel.

Some boat builders may remove one or more of the alternators during the installation of the engine. It is essential that when the alternators are refitted that the alignment is perfect or premature belt wear will occur.

11. Belt Replacement

WARNING:

SEVERE HAZARD! KEEP HANDS AND OTHER BODY PARTS AWAY FROM MOVING/ROTATING PARTS. WEAR TIGHT FITTING CLOTHING AND KEEP YOUR HAIR SHORT OR TIE BACK. REMOVE ALL JEWELLERY BEFORE COMMENCING WORK. CHECK BEFORE STARTING THE ENGINE THAT ANY TOOLS OR RAGS USED DURING MAINTENANCE HAVE BEEN REMOVED FROM THE AREA.

- Ensure the ignition key is removed before replacing any belts.
- Turn the battery master switch to the off position before replacing any belts.
- Ensure that you have the correct replacement belts before starting this procedure. Some engines may have been fitted with non-standard optional alternators which may not use the belt sizes listed. Make a note of these belt sizes upon delivery.
- Loosen the top adjuster bolts and the lower mounting pivot nut and bolt.
- Push the alternator towards the engine to loosen the belt.
- Remove the belt.
- Hold the belt in position over the top alternator pulley. Rotate the engine if required by hand, to guide the new belt into the “vee”.
- Re-tension the belt as above.

12. Control Panel Maintenance

WARNING:

REMOVE THE IGNITION KEY BEFORE WORKING IN ENGINE COMPARTMENT.
TURN BATTERY ISOLATION SWITCHES OFF.

- **To replace an illumination bulb:** Release the panel from its mounting. The bulbs are accessible from the rear of the panel. Remove the wires, unscrew the nut and pull out the bulb housing from the panel. Remove the bulb and replace. Refit bulb housing, screw the nut back up and refit the wires.
- **To replace any gauge:** Release the panel from its mounting. The gauges are accessible from the rear of the panel. Unplug the wire connectors, unscrew and pull the gauge out of the panel. Replace the gauge and refit. Reattach the wiring connectors.

Periodically squirt a lubricant into the key switch slot when the key has been removed (see Section 8 – Service Schedule). A lubricant such as WD40 <u>with silicon</u>, would be suitable. Other lubricants are available. Then with the battery master switch turned off, operate the key switch a couple of times. This will ensure the lubricant works into the mechanism.

SECTION 8 – Service Schedule

NOTICE:

REFER TO THE SHIRE MANUAL PRIOR TO CARRYING OUT ANY SERVICE OR MAINTENANCE WORK.

WARNING:

PRIOR TO CARRYING OUT ANY SERVICE OR MAINTENANCE WORK MAKE SURE THE RELEVANT PERSONAL PROTECTION EQUIPMENT IS WORN.

1. Specifications and Capacities

Specification of Coolants and Lubricants to use:

Component	Lubricant
Engine	SAE 15W 40 API Class CH-4 / CF-4 Oil
Coolant	50% Clean Water + 50% Ethylene Glycol Antifreeze
PRM 125, 150 and 280 Gearbox	Engine Oil

Engine Oil Capacity (with Filter):

Engine	Capacity (Litres)	Capacity (Pints)
39, 43 & 49	9.5	16.7

Gearbox Oil Capacity (Excluding Cooler):

Gearbox	Capacity (Litres)	Capacity (Pints)
PRM 125	0.4	0.7
PRM 150	1.4	2.5
PRM 280	1.5	2.7

2. Service Intervals

	Check	Change	Notes
Engine Oil & Filter	Daily (Level)	Every 250 Hours OR 12 Months*	First change after 50 hours
Gearbox Oil	Weekly (Level)	Every 250 Hours OR 12 Months*	First change after 25 hours
Coolant Level	Daily (Level)	Every 24 Months	-
Primary Fuel Filter **	50 hours	At first 50 hour service and then every 250 hours OR 12 Months*	Drain water every 50 hours OR Monthly***
Secondary Fuel Filter **	-	At first 50 hour service and then every 250 Hours OR 12 Months*	-
Air Filter Element	250 Hours	Every 750 hours OR 24 Months*	Sooner if required
Drive Belts	Daily	As required	Adjust as necessary
All Hoses	50 hours	As required	Check hoses for damage or leaks. Replace as necessary
Key Switch	Lubricate	Every 150 hours OR 12 Months*	As per instructions in Section 7 - Service Procedure

* Whichever occurs first.

** Only original filters which meet the Recreational Craft Directive/ Recreational Craft Regulation should be fitted to your engine.

*** If large quantities of water are found in the fuel when the filter is drained, increase the frequency of draining plus change fuel filters more regularly.

SECTION 9 – Wiring Diagrams

1. Engine Wiring Diagram Shire 39,43 & 49

Wire Col/No	Connects To	Rated
Brown	1 on 11pin - Dash Panel live	14 A
Grey	2 on 11pin - Ignition on	5 A
Red/White 1	3 on 11pin - Cranking Live	10 A
Red/White 2	Starter Relay to Start Solenoid	14 A
Red/White 3	Glow Plug Relay to Timer (R/W)	14 A
Black/Blue	4 on 11pin - Tacho wire	5 A
Yellow	5 on 11pin - Charge W/L 50A alt	5 A
Yellow 2	Glow Plug Relay to Timer (Y)	14 A
Brown/Yellow	6 on 11pin -Charge W/L Extra Alt(s)	5 A
Blue/Yellow	7 on 11pin - Water Switch (A)	5 A
Blue	8 on 11pin - Water Sender (S)	5 A
Green/Yellow	9 on 11pin - Oil Switch (WK)	5 A
Purple	10 on 11pin - Oil Sender (G)	5 A
Black 1	Ground (on engine casing)	5 A
Black 2	11 on 11pin - Ground (on casing)	14 A
Black 3	Heater Relay to Starter Relay	5 A
Black 4	Stop Solenoid to Earth	14 A
White 1	Stop Solenoid to Glow Relay	14 A
White 2	Glow relay to F4 40A fuse	14 A
White 3	Starter Cranking Live to F4 40A fuse	14 A
White 4	Glow relay to Timer	14 A
Red 1a	Engine Alternator Live feed	35 A
Red 1b	F2/F3 15A Fuses Live feed wires	14 A
Red 2	F1 40A Live Feed	30 A
Red 3	Glowplug Supply from Heater Relay	30 A
Red 4	Heater Relay to F1 40A fuse	30 A
Red 5	F2 15A to Starter Relay	14 A
Yellow/Red	12 – Glow Plug Lamp	5 A

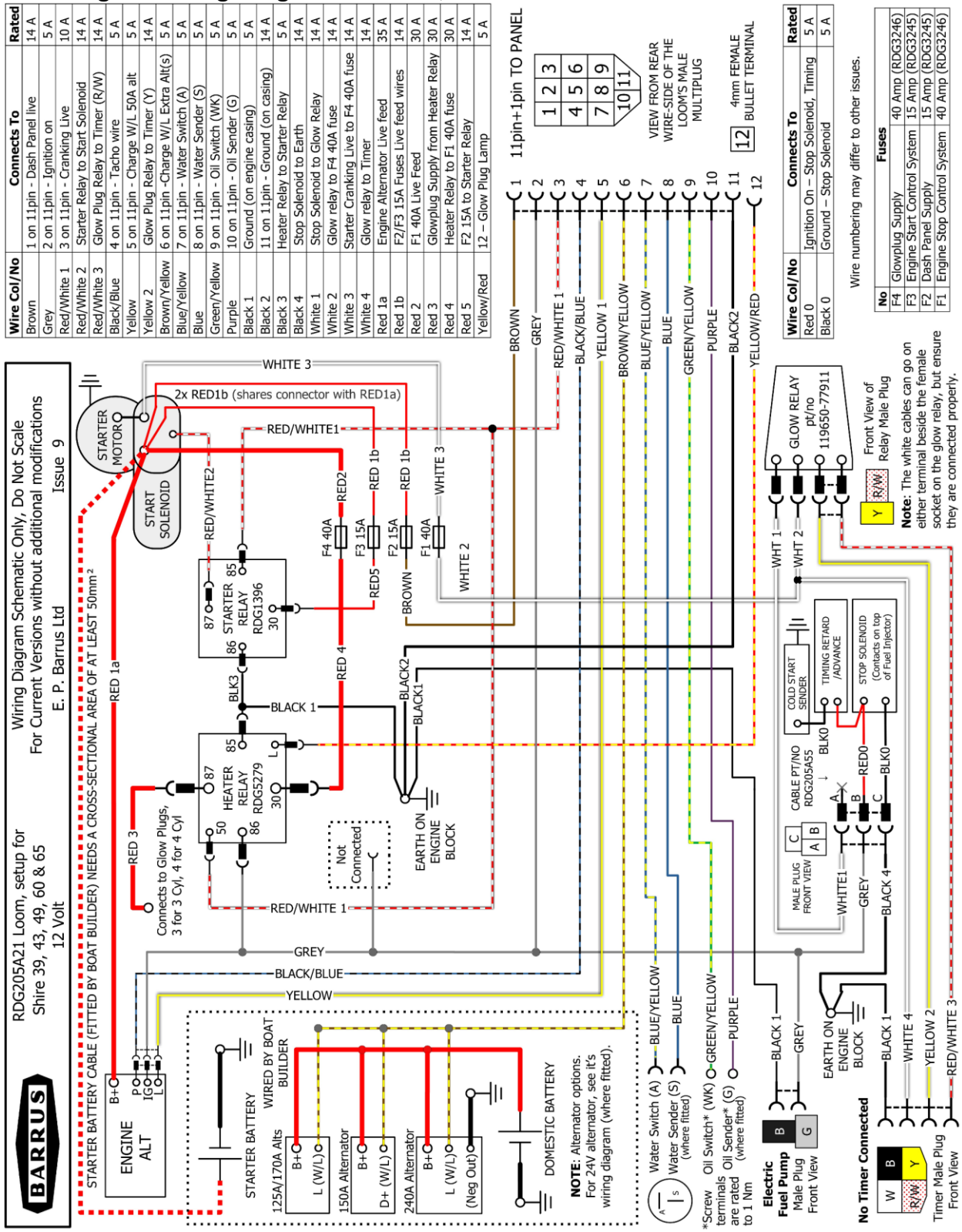

Figure 25: Shire 39, 43 & 49 Wiring Diagram

2. Shire 39, 43 & 49 Cold Start Wiring Diagram

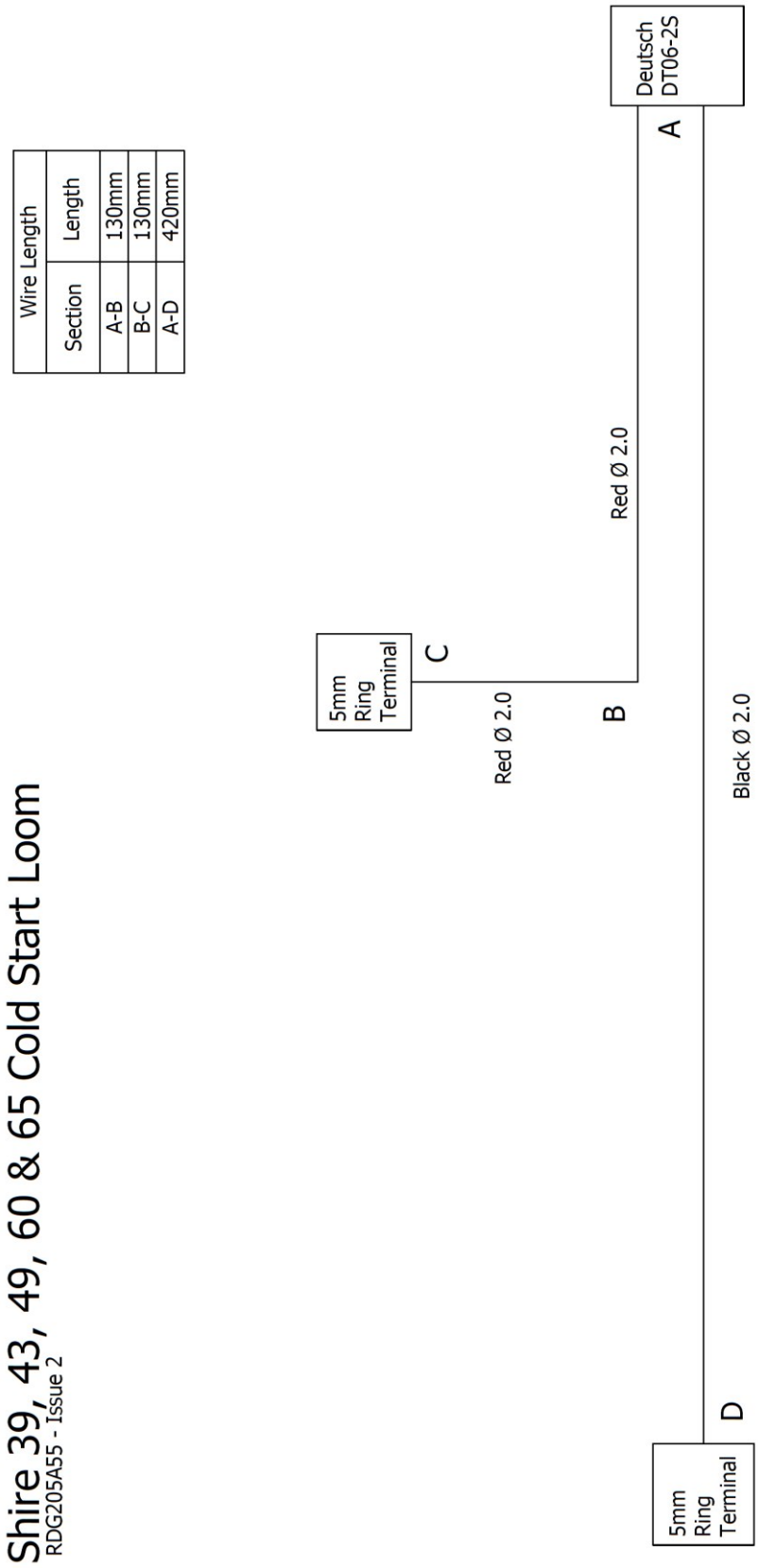

Figure 26: Shire 39, 43 & 49 Cold Start Wiring Diagram

3. Basic Control Panel Wiring Diagram

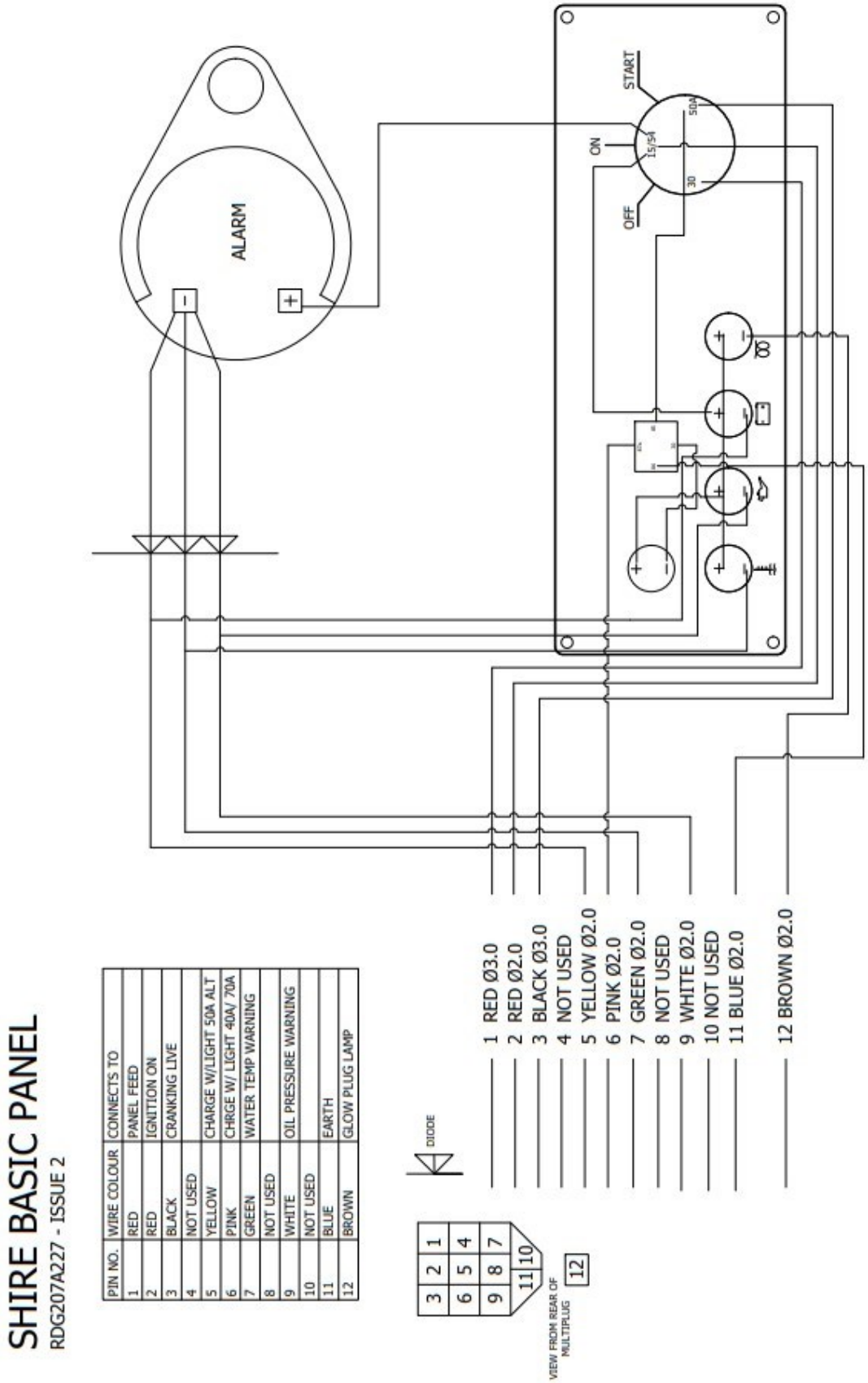

Figure 27: Basic Control Panel Wiring Diagram (Twin Alternator Engines)

4. Standard Control Panel Wiring Diagram

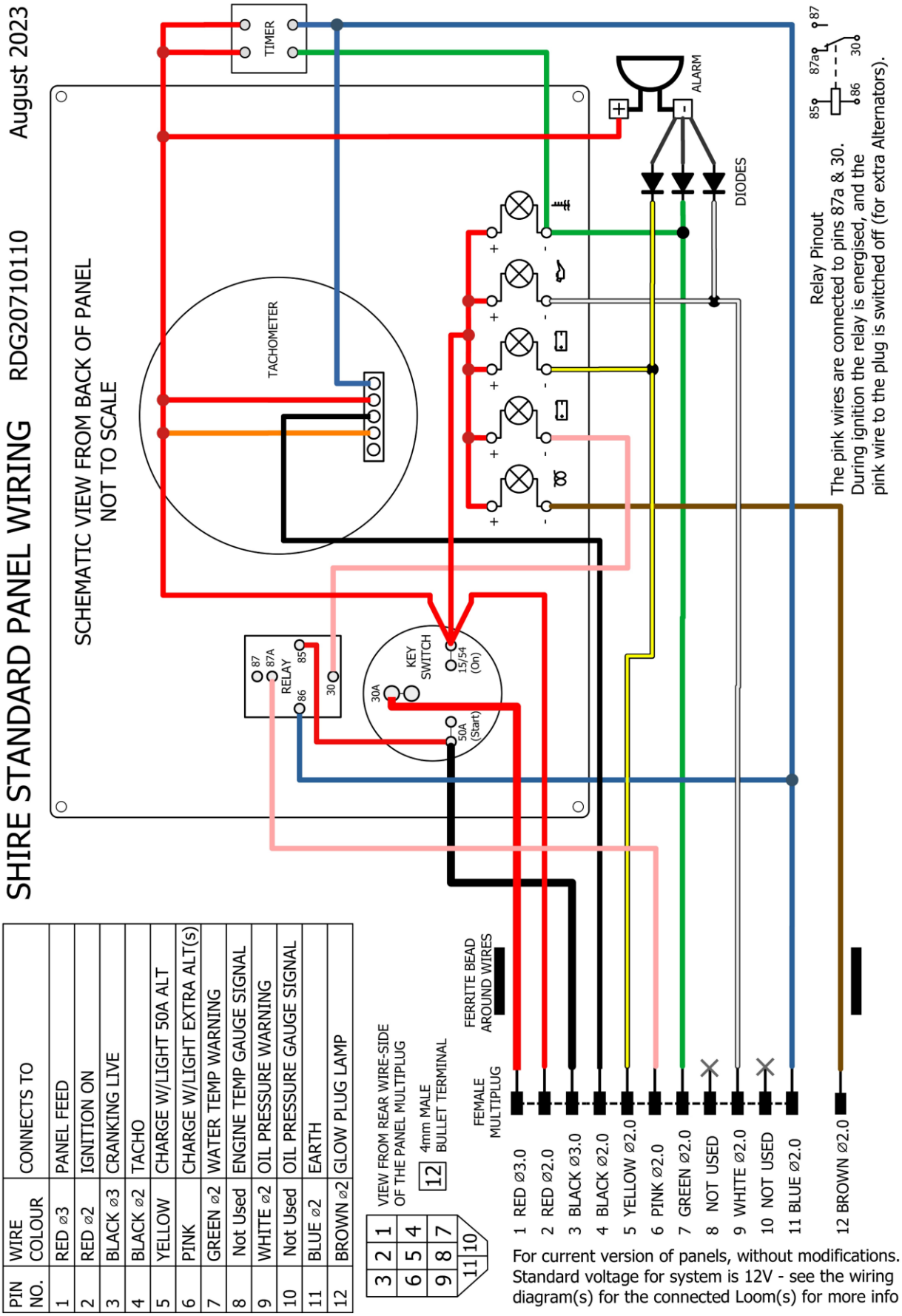

PIN NO.	WIRE COLOUR	CONNECTS TO
1	RED ø3	PANEL FEED
2	RED ø2	IGNITION ON
3	BLACK ø3	CRANKING LIVE
4	BLACK ø2	TACHO
5	YELLOW	CHARGE W/LIGHT 50A ALT
6	PINK	CHARGE W/LIGHT EXTRA ALT(s)
7	GREEN ø2	WATER TEMP WARNING
8	Not Used	ENGINE TEMP GAUGE SIGNAL
9	WHITE ø2	OIL PRESSURE WARNING
10	Not Used	OIL PRESSURE GAUGE SIGNAL
11	BLUE ø2	EARTH
12	BROWN ø2	GLOW PLUG LAMP

Figure 28: Standard Control Panel Wiring Diagram

5. Deluxe Control Panel Wiring Diagram

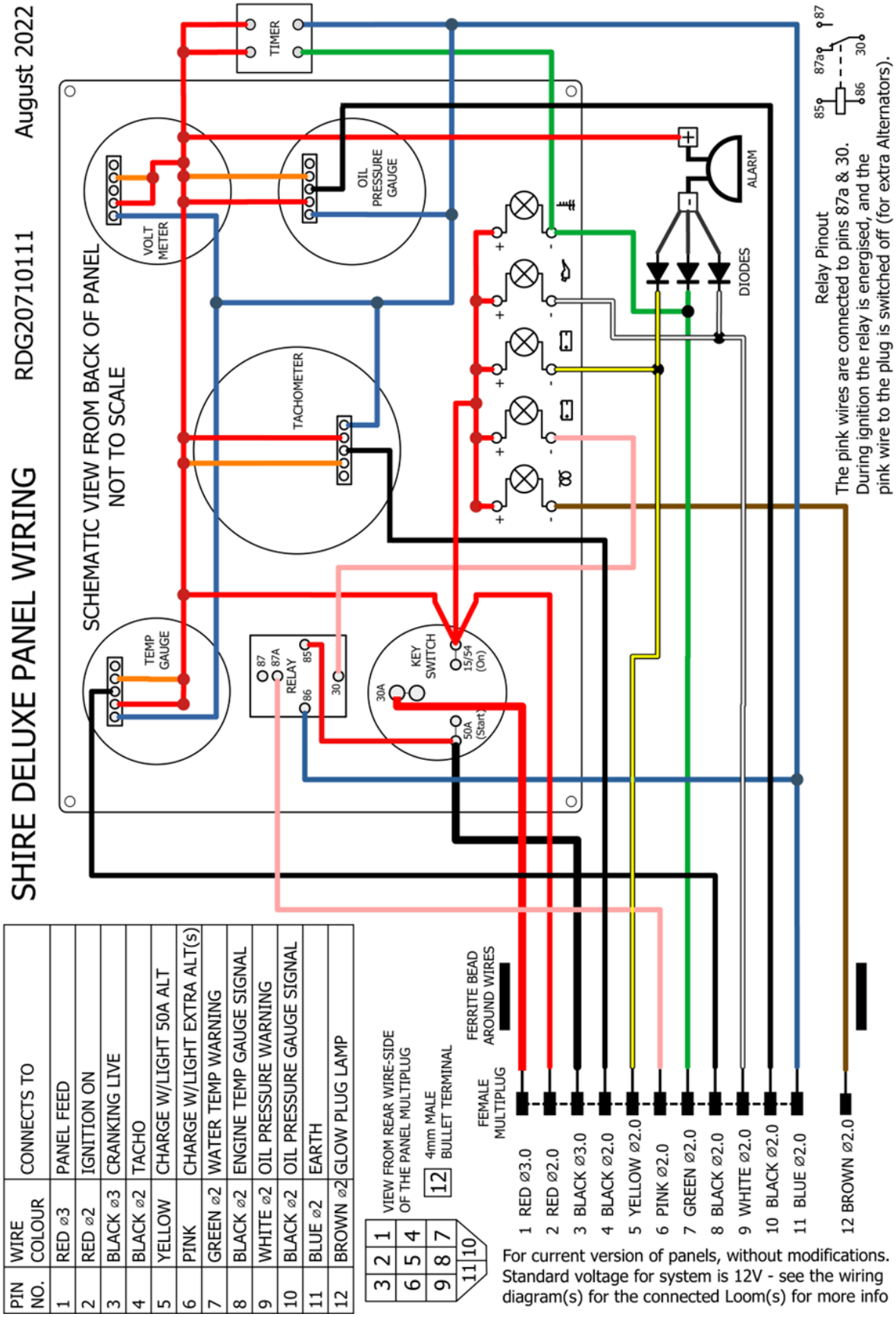

PIN NO.	WIRE COLOUR	CONNECTS TO
1	RED ø3	PANEL FEED
2	RED ø2	IGNITION ON
3	BLACK ø3	CRANKING LIVE
4	BLACK ø2	TACHO
5	YELLOW	CHARGE W/LIGHT 50A ALT
6	PINK	CHARGE W/LIGHT EXTRA ALT(s)
7	GREEN ø2	WATER TEMP WARNING
8	BLACK ø2	ENGINE TEMP GAUGE SIGNAL
9	WHITE ø2	OIL PRESSURE WARNING
10	BLACK ø2	OIL PRESSURE GAUGE SIGNAL
11	BLUE ø2	EARTH
12	BROWN ø2	GLOW PLUG LAMP

Figure 29: Deluxe Control Panel Wiring Diagram

6. Prestolite 24 Volt 120 Amp Alternator Wiring Diagram

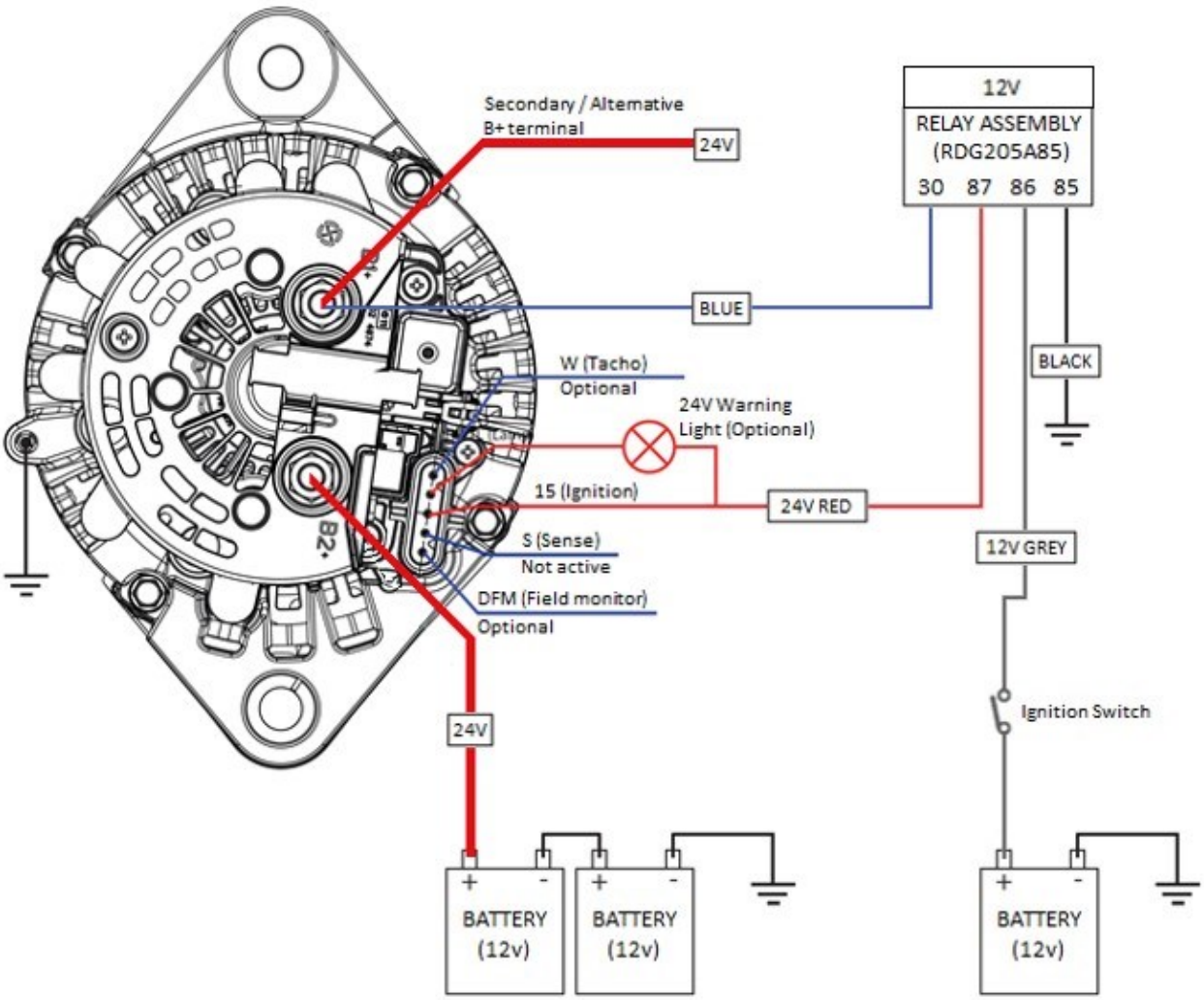

Figure 30: 24v 120A Alternator Wiring

Before wiring the 24 Volt 120 Amp Alternator please read the information below:

- The S (Sense) terminal is not active on the AVI147J3110HD or AVI147J3113HD models so does not need connecting (on those two models).
- The W (Tacho) is an option (when a rev counter is fitted) and is not required for alternator functionality.
- The DFM (Field Monitor) usage is dependent on the engine and is not required for alternator functionality.
- The Terminal 15 (Ignition) provides excitation and **MUST** be connected.
- The L (Warning Lamp) is an option (when a warning lamp is fitted) and is not required for alternator functionality.

- The alternator is fitted with two B+ terminals. Either of the B+ terminals can be used.
- The alternator is earth return (grounded) Ensure there is a good earth connection to the engine.

A 12v ignition operated relay may be required to switch on the 24v supply to Terminal 15 if the alternator is a stand alone item fitted to a 12v engine.

- Use relay assembly RDG205A85
- Use relay RDG1396

SECTION 10 – Technical Data

1. Engine Data

Engine Model	**Shire 39 / 43 / 49**		
Type	Vertical In-Line Diesel Engine		
Combustion System	Direct Injection		
Aspiration	Natural		
Number of Cylinders	4		
Bore x Stroke	87 x 103mm		
Displacement	2.449L		
Rated Output/Speed	**Shire 39** 29kW (39hp) at 2000rpm	**Shire 43** 32kW (43hp) at 2300rpm	**Shire 49** 36.5kW (49hp) at 3000rpm
Low Idling	875 - 900 rpm		
High Idling	**Shire 39** 2200 ±25 rpm	**Shire 43** 2500 ±25 rpm	**Shire 49** 3200 ±25 rpm
Direction of Rotation	Anti-clockwise Viewed from Flywheel End		
Lubricating System	Pressure Splashing		
Normal Oil Pressure at Rated Engine Speed	0.25 – 0.4 MPa / 2.5 –4 bar / 36 – 58 psi		
Normal Oil Pressure at Low Idle Speed	0.068 MPa / 0.68 bar / 10 psi		
Electric Starting System	Starter Motor: DC12V		
	Starter Capacity: 2.3kW		
	Minimum Recommended Start Battery Capacity: 12V 100Ah		
Valve Clearances (Exhaust and Inlet)	0.2 ± 0.05mm		

2. Return Diesel System

Maximum Fuel Temp	43°c
Maximum Flow	0.3 Litre / Min (3000 rpm)
Flow at Idle	0.1 Litre / Min

The flexible fuel lines used on the engine comply with ISO 7840.

3. Dry Weight of Engine Data

Dry Weight of Engine (Including Gearbox)*	
Model	**Dry Weight (kg)**
Shire 39	310kg
Shire 43 & 49	320kg

* The dry weights stated are for the standard engine in each model range. If a different gearbox or additional alternators are ordered the weight will change accordingly.

4. Torque Settings for Screws, Bolts and Nuts

Main Bolts and Nuts

Name	Specification	Tightening Torque (Nm)	Tightening Torque (Degrees)
Main Bearing Cap Bolts	M10 x 1 (Grade 10.9)	First time: 30±1	Second time: 60±3°
Cylinder Head Bolts	M11 x 1.5 (Grade 10.9)	First time: 30 Second time: 50	Third time: 60° Fourth time: 60°
Connecting Rod Bolts	M8 x 1 (Grade 12.9)	First time: 25±1	Second time: 60±3°
Flywheel Bolts	M12 x 1.5 (Grade 12.9)	100±3	-
Glow Plugs	M10 x 1.25	20~25	-
Injector Clamp Plate Bolt	M8 x 1.25 (Grade 10.9)	20	-
Injection Pump Drive Shaft Nut	-	80~100	-
Crankshaft Pulley Bolt	M18 x 2 (Grade 10.9)	First time: 210+15	Second time: 60±2.5°

General Use Screws, Bolts and Nuts

	Thread Diameter					
	M6	M8	M10	M12	M14	M16
Grade 8.8	9~11	25~30	41~51	73~89	122~149	182~222
Grade 10.9	12~14	29~35	58~71	105~128	160~195	247~290

5. Cylinder Head Tightening Sequence

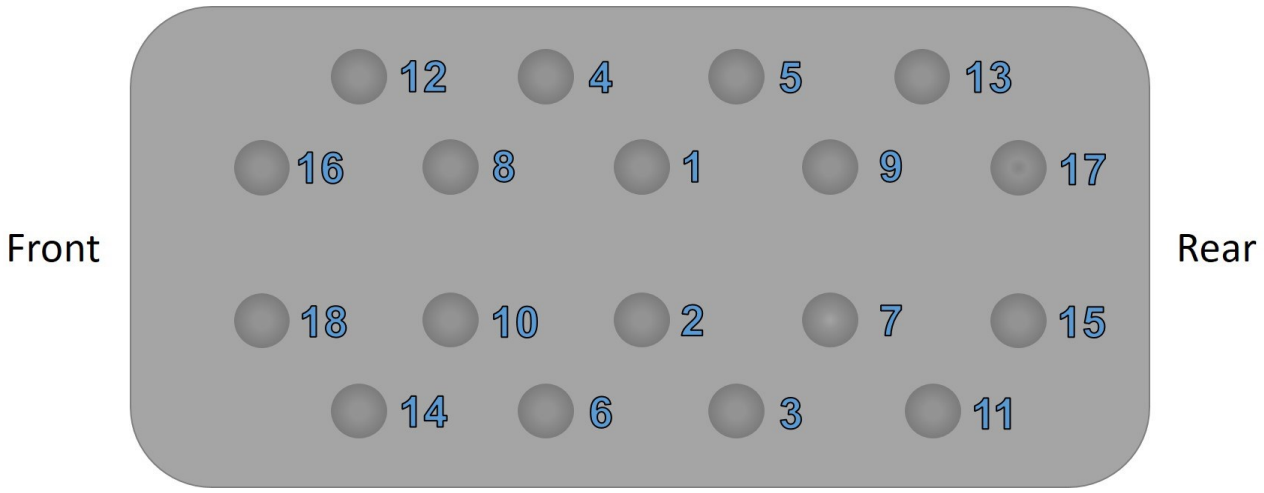

Figure 31: Cylinder Head Tightening Sequence

- Tighten all the cylinder head bolts to 30Nm following the sequence shown in **Figure 31**.
- Tighten all the cylinder head bolts to 50Nm following the sequence shown in **Figure 31**.
- Put a paint mark on each bolt as reference point.
- Turn all the cylinder head bolts 60° clockwise following the sequence shown in **Figure 31**.
- Turn all the cylinder head bolts a further 60° clockwise following the sequence shown in **Figure 31**.

The bolts can only be reused a <u>MAXIMUM</u> of two times

6. Fuel Injection Pump

If the fuel injection pump is removed and replaced for any reason, please be aware that there is no key or master spline on the injection pump drive shaft. To achieve the correct injection pump timing either look at the Stanadyne website or follow the instructions below:

- Make sure the timing lock pin on the fuel injection pump is in the unlocked position.

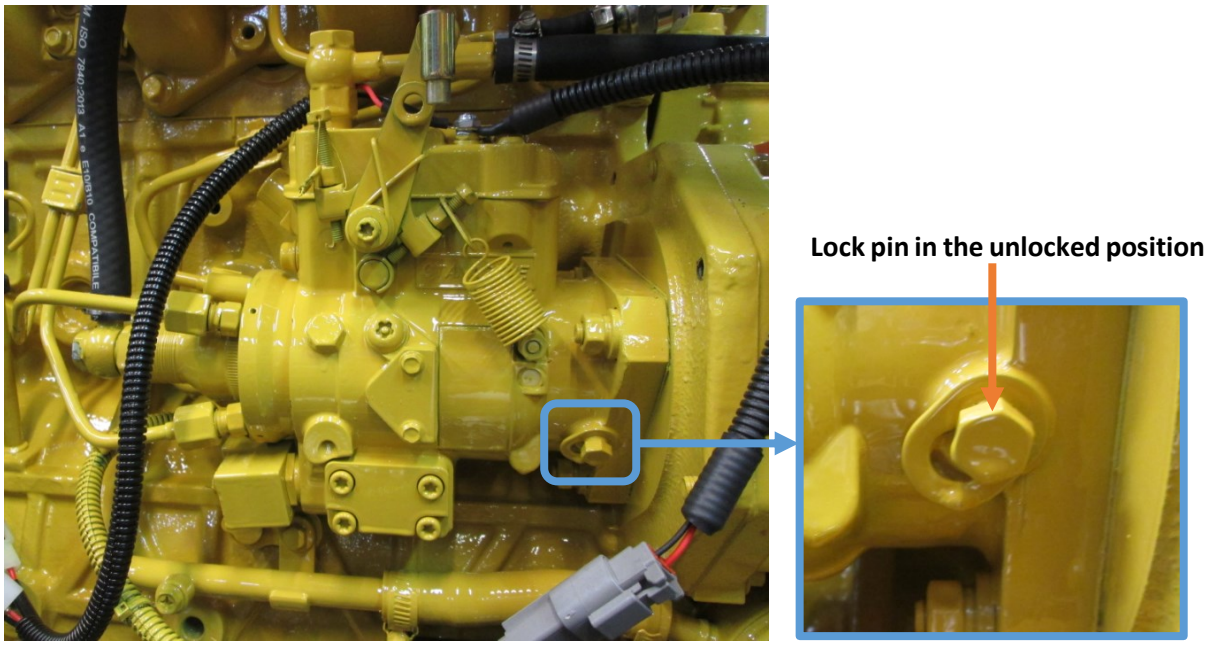

- Loosen the three nuts securing the fuel injection pump to the engine. Make sure the fuel injection pump is in the middle of its adjustment on the slots. When the fuel injection pump is in the middle of the slots retighten the nuts.

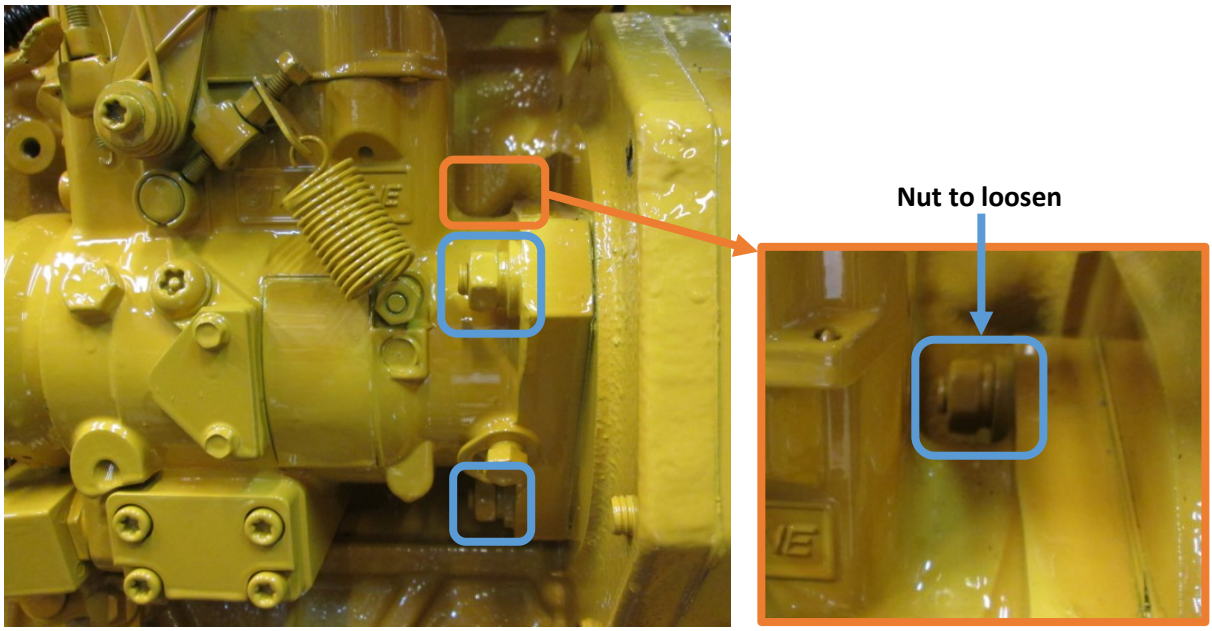

- Remove the front cover from the engine.

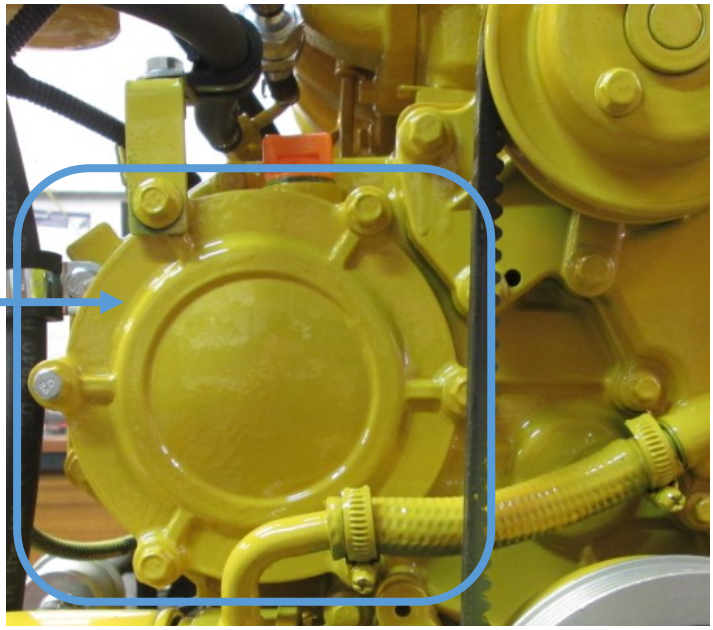

- Make sure the pump timing gear is loose on the pump shaft.

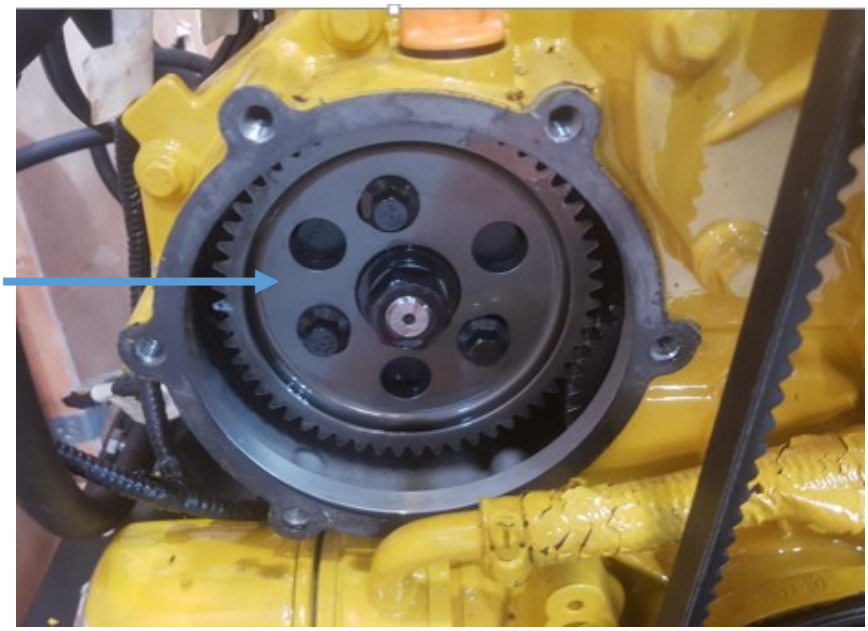

- Remove the timing window cover from the fuel injection pump.

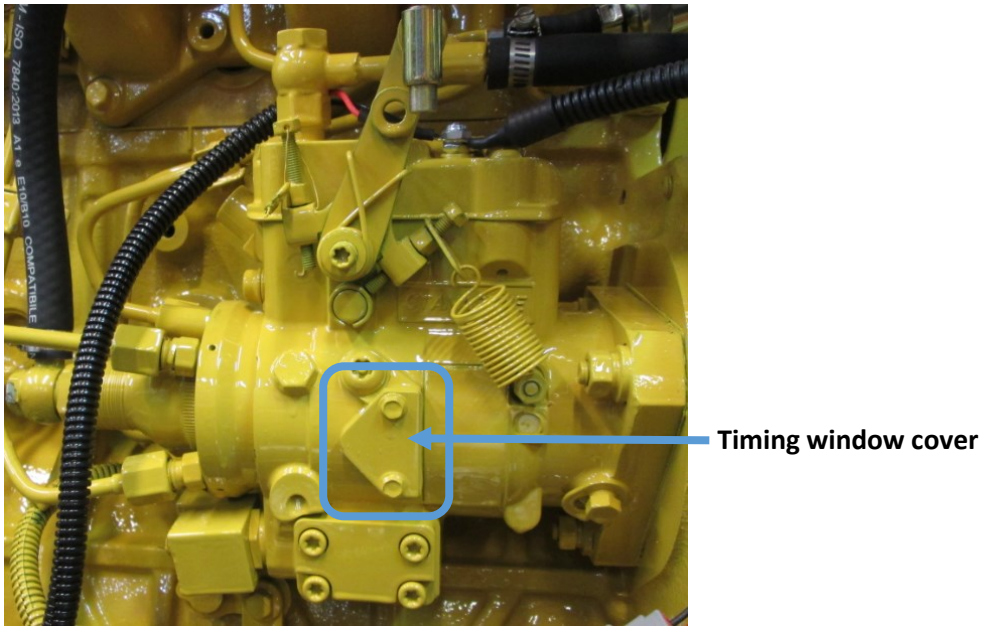

- Make sure the line on the shaft and the line on the pump body line up.

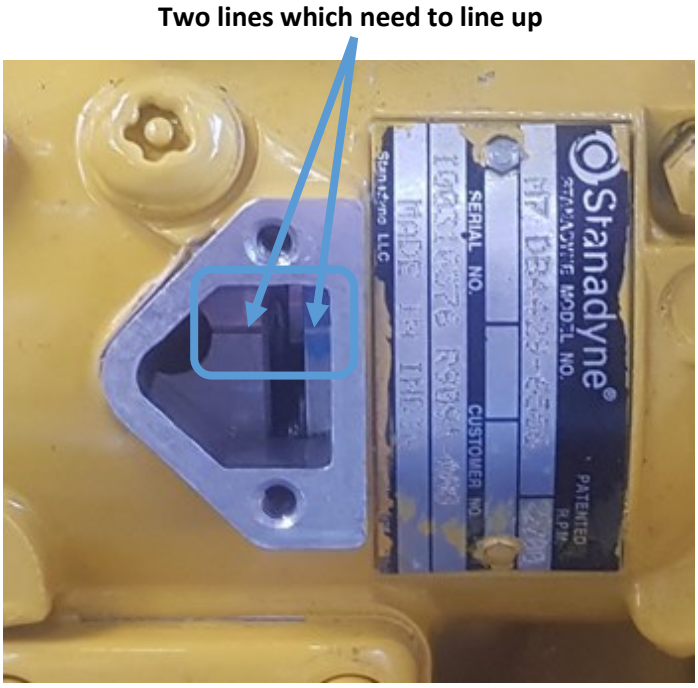

- Put the timing lock pin on the fuel injection pump into the locked position. **NOTE: Do <u>NOT</u> attempt to rotate the pump shaft when the pump shaft timing is locked.**

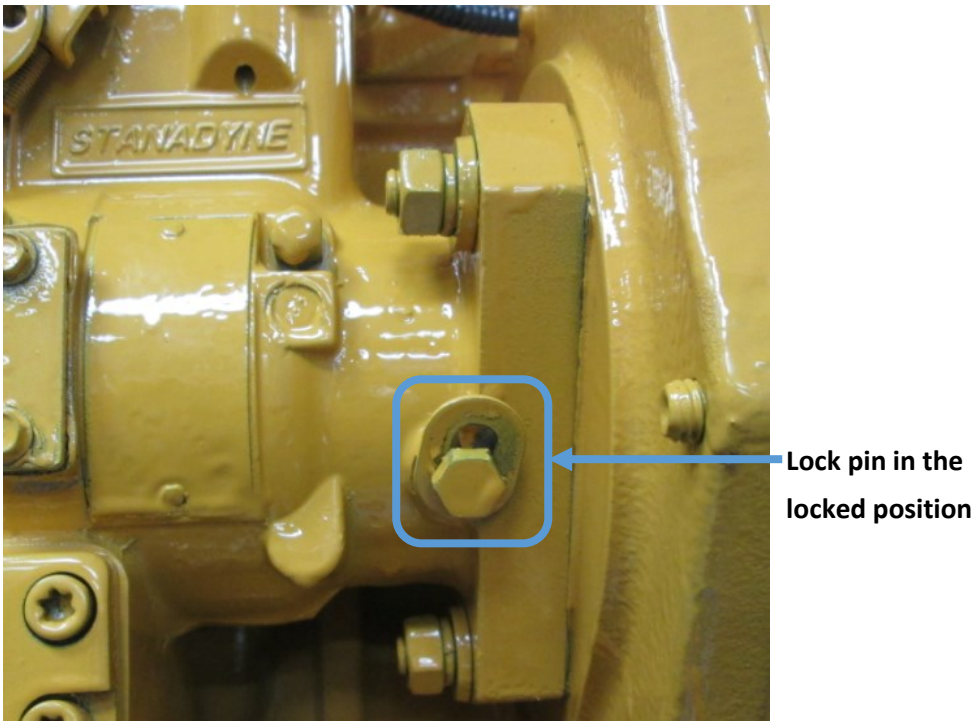

- Rotate the engine (make sure the pump timing gear is rotating freely on the pump shaft) until the timing marks line up with 6° btdc with cylinder number 1 in compression.

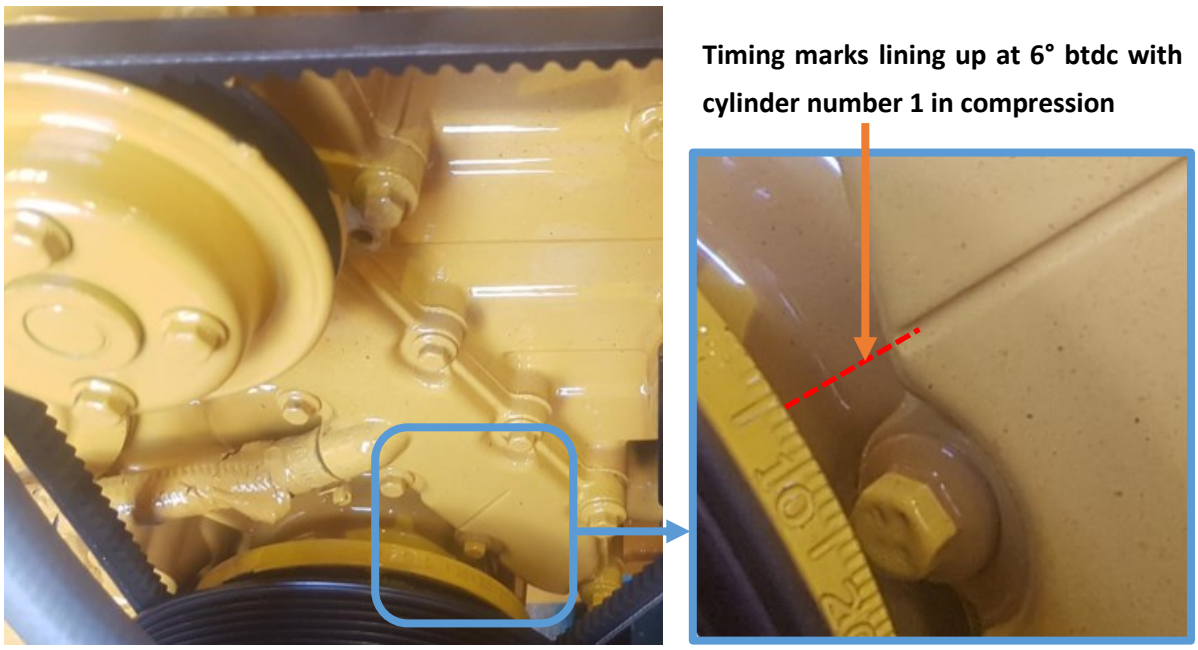

- Torque the pump timing gear to 25Nm on the pump shaft using a torque wrench.

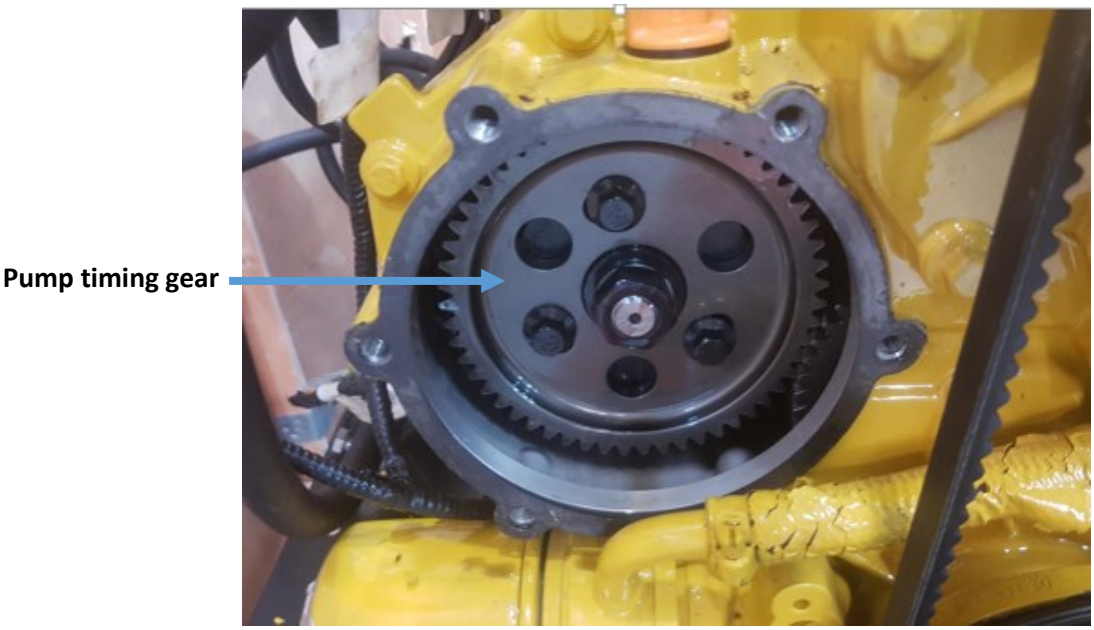

- Put the timing lock pin on the fuel injection pump back into the unlocked position.

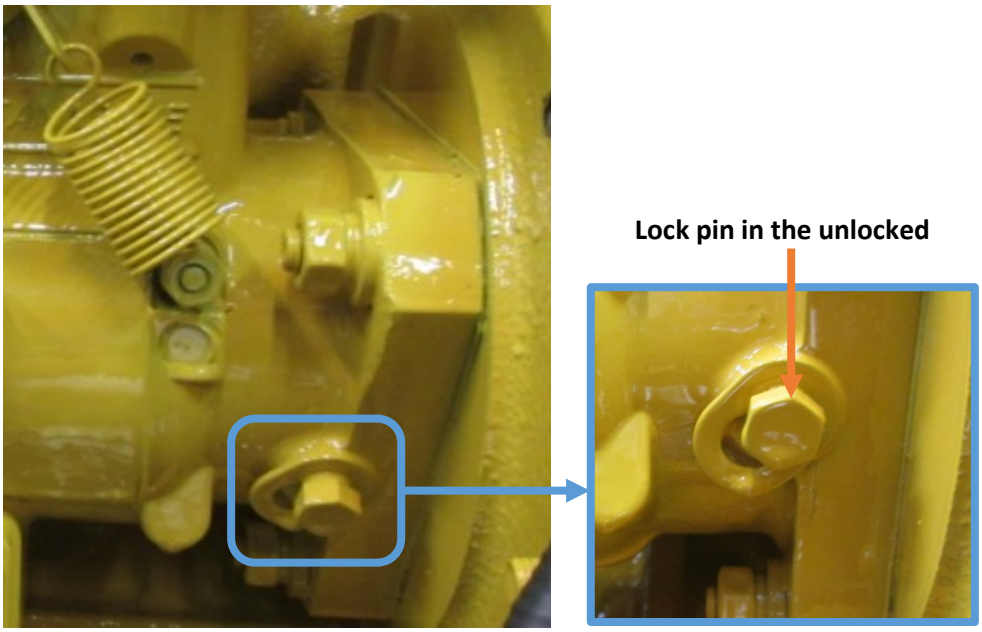

- Torque the pump timing gear to 50Nm on the pump shaft using a torque wrench.

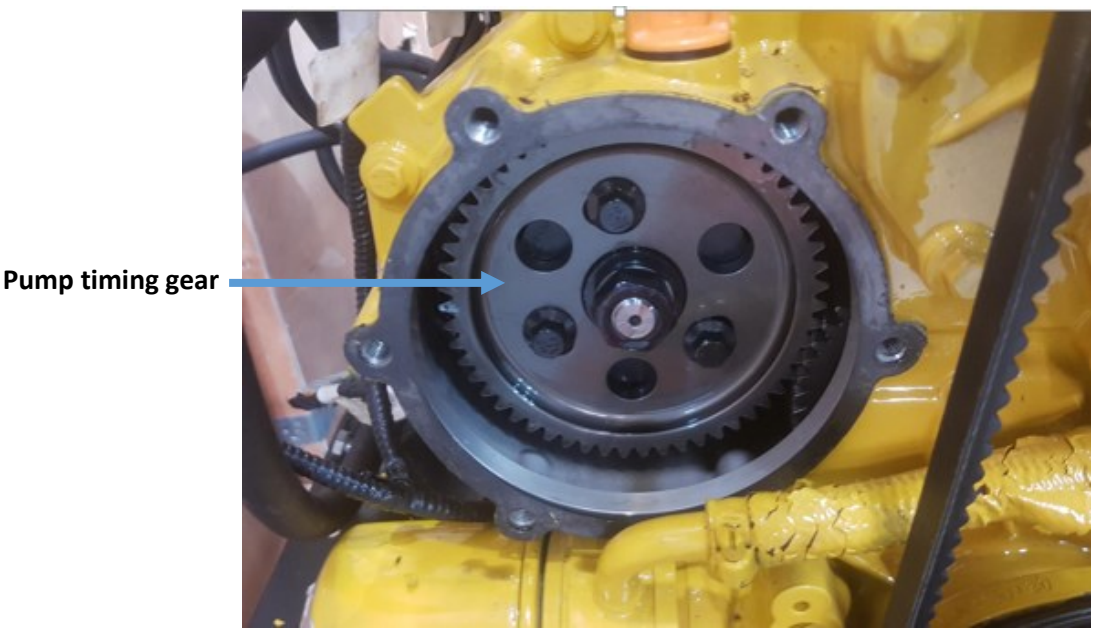

- Refit the front cover from the engine.

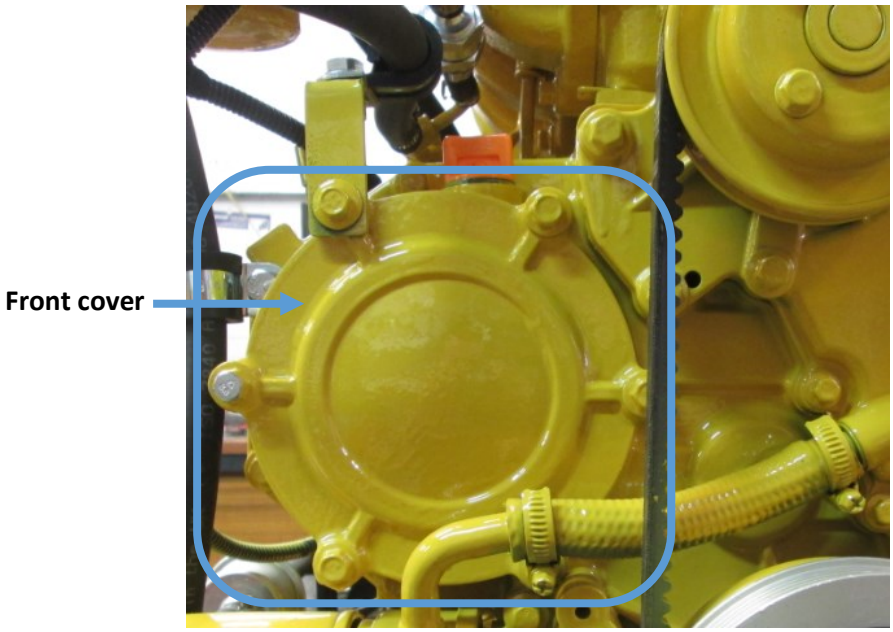

- Refit the timing window cover from the fuel injection pump. Torque the screws to 1.5 – 2.5Nm

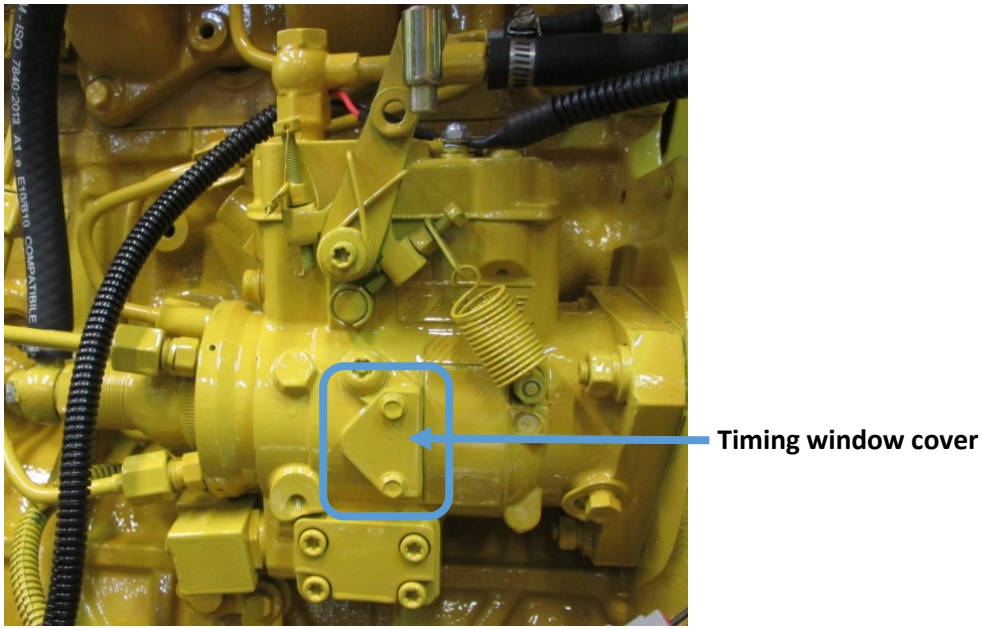

SECTION 11 – Dealer List

Area	Company	Telephone	Email
BERKSHIRE	Driveline Marine	0118 942 3877	tam@drivelinemarine.com
	Marcus Marine Engineering Ltd (Servicing, Repairs & Breakdowns only)	07900890911	Marcus@marcusmarine.co.uk
BRISTOL	Advance Marine	01275 815910	phil@advancemarine.co.uk
CHESHIRE	Midland Chandlers	01928 751 800	preston.brook@midlandchandlers.co.uk
	Nantwich Canal Centre Ltd	01270 625122	info@nantwichcc.com
CUMBRIA	Windermere Aquatic Ltd	01539 442121	service@aquaticboatcentres.com
DERBYSHIRE	Midland Chandlers	01283 701445	willington@midlandchandlers.co.uk
DEVON	Sleeman & Hawken Ltd	01626 778266	sales@sleeman-hawken.co.uk
ESSEX	French Marine Motors Ltd	01206 305233 01255 850303	info@frenchmarine.com
HAMPSHIRE	Marine Power Ltd	0238 0403918	sales@marine-power.co.uk
HERTFORDSHIRE	Lee Valley Marina	01920 870499 01920 293101	stansteadmarina@vibrantpartnerships.co.uk
	Keypart Ltd	01923 276000	sales@keypart.com
LEICESTERSHIRE	Foxton Boat Services Ltd	01162 792285	foxtonboats@btinternet.com
LONDON	Lee Valley Marina	020 88061717	springfieldmarina@vibrantpartnerships.co.uk
MIDDLESEX	Lindon Lewis Marine	01932 247427	service@pushtheboatout.com
NORTHAMPTON -SHIRE	Grand Junction Boat Co.	01604 858043	info@boatrepairs.uk.com
	Midland Chandlers	01788 891401	braunston@midlandchandlers.co.uk
NOTTINGHAM	Farndon Marina	01636 705483	info@farndonmarina.co.uk
STAFFORDSHIRE	JD Boat Services Ltd	01902 791811	david@jdboats.co.uk
	Midland Chandlers	01785 712437	penkridge@midlandchandlers.co.uk
	River Canal Rescue	01785 785680	enquiries@rivercanalrescue.co.uk
	Stone Boatbuilding Company	01785 812688	stonechandlery@aol.com
	Streethay Warf	01543 414808	office@streethaywharf.co.uk
WARWICKSHIRE	Springwood Haven Leisure Ltd	0845 4566572	enquiries@springwoodhaven.co.uk
	Fenny Marina	01527 876438	enquiries@craftedboats.co.uk
WILTSHIRE	Devizes Marina	01380 725300	sales@devizesmarina.com

WORCESTERSHIRE	Crafted Boats Ltd	01527 876438	craftedboats@btconnect.com
	Evesham Marina	01386 768500	info@eveshammarina.co.uk
	Starline Narrowboats	01531 632003	enquiries@starlinenarrowboats.co.uk
YORKSHIRE	Rodley Boat Centre	01132 576132	rodleyboatcentre@msn.com
MONMOUTHSHIRE	Castle Narrowboats	01873 830001	info@castle.narrowboats.co.uk
EIRE	Southshore Marina & Diesel Ltd	028383 41010	info@southshoremarine.co.uk

SECTION 12 – Shire Parts

Model	Shire 39	Shire 43	Shire 49
Primary Fuel Filter	RDG9188346	RDG9188346	RDG9188346
Secondary Fuel Filter	RDG9188345	RDG9188345	RDG9188345
40A Alternator	R300037010003	R300037010003	R300037010003
40A Alternator Belt (If 125A/150A Alternator is fitted)	R300037010001	R300037010001	R300037010001
40A Alternator Belt (If 240A Alternator is fitted)	GB/T12732-1996	GB/T12732-1996	GB/T12732-1996
125A Alternator	128990-77250	128990-77250	-
125A Alternator Belt (From Serial No xx-02798)	RDG6076	RDG6076	-
150A Alternator	-	-	RDG20110201
150A Alt Belt	RDG2254	RDG2254	RDG2254
170A Alternator	RDG201A29	RDG201A29	RDG201A29
170A Alternator Belt	RDG6076	RDG6076	RDG6076
240A Alternator (Option)	RDG2019682	RDG2019682	RDG2019682
240A Alt Belt (Option)	RDG6076	RDG6076	RDG6076
Air Filter Element	RDG5795	RDG5795	RDG5795
Oil Filter	R300010120001	R300010120001	R300010120001

Control Panel:

Basic Control Panel	RDG207A227
Standard Control Panel	RDG20710110
Deluxe Control Panel (Option)	RDG20710111

Fuses & Relays:

The electrical system is fitted with four blade type fuses:

1	Engine Stop Control System Fuse	40amp	RDG3246
2	Control Panel Supply Fuse	15amp	RDG3245
3	Engine Start Control System Fuse	15amp	RDG3245
4	Glow Plug Fuse	40amp	RDG3246
5	Cold Start Relay	-	RDG5279
6	Starter Relay	-	RDG1396

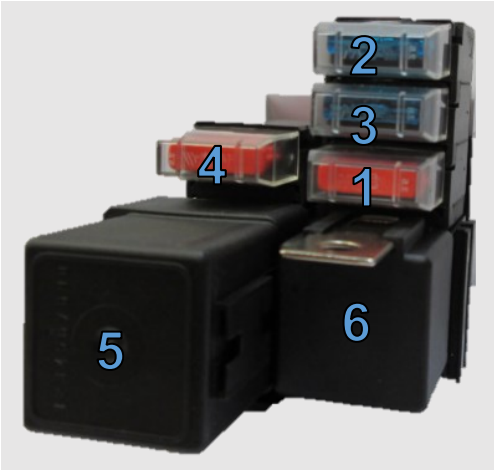

Figure 32: Fuses & Relays

Engine Oil:

Engine Oil is available from your Shire Dealer in a 20 litre container (Part Number VC83070-020).

Diesel Fuel Additive:

Diesel fuel additive is available from your Shire Dealer in a handy 500ml container (Part No RDG80210219).

Shire Parts Book:

On the E.P Barrus Website there is a Shire 39 Parts Book, Shire 43 Parts Book and Shire 49 Parts Book which has a more extensive list of parts available for your engine. To access the Shire Parts Books on the internet, type the following short link into your search engine:

https://www.barrus.co.uk/divisions/marine/diesel/shire/downloads/shire-parts/?p=1

SECTION 13 – Afterlife Recycling

When it becomes necessary to dispose of your engine. This may be possible at recycling centre; however, it will likely require careful disassembly first before disposal. For further information please contact your local recycling centres for disposal advice to see what they will accept for disposal.

Engines are primarily made up of steel, cast iron and aluminium; and are recyclable after removal of other parts. Larger components such as the engine block may only be handleable by a few centres, unlike say smaller plastic components.
Most of the other parts require special disposal as they include hazardous waste, and must be separated and declared upon disposal, including:

Fluid Disposal
You must make sure that all unused oil, fuel and coolant is drained out carefully and disposed of correctly at a local recycling centre. Under NO circumstance must any oil, fuel or coolant be put down any drains or leaked into waterways or the environment.

Contact local recycling centres or garages, or check their websites to find out whether they take or recycle engine fluids. If they don't, they may be able to direct you to your nearest drop-off point depending on the volume. Recycle your coolant/oil/fuel in distinct well-sealed containers that are clearly labelled.

Waste Electrical Electronic Equipment (WEEE) and Battery recycling
Parts contain WEEE waste or batteries should not be disposed of in your domestic waste. You should recycle WEEE or batteries in accordance with your local authority or recycling centre's directions. Batteries will need declaring separately for safety purposes.

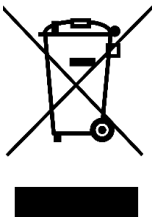

Packaging materials that are unwanted should be sorted, with cardboard, wood, and paper recycled where possible. Some Local Authorities and recycling centres may accept plastic bags, films and bubble wrap for recycling. Polystyrene is very rarely recycled and may have to be disposed of in general rubbish, inside bags.

Reduce, Reuse, Recycle

For further information about disposal please contact your Local Authority. You can also get more advice and guidance about recycling in your area at the following website http://www.recycle-more.co.uk.

SECTION 14 – Declarations

1. **Declaration of Conformity for Recreational Craft Propulsion Engine with the requirements of Directive 2013/53/EU.**

Designation:	Marine engine for propulsion of, and incorporation into, watercraft.

Description of Engine(s) and Essential Requirements:
Engine Type: Inboard Engine **Fuel Type**: Diesel **Combustion Cycle**: 4 Stroke

Identification of Engine(s) covered by this Declaration of Conformity

Engine Model	Base Engine Type	Engine Family code	Type Approval Certificate Number	Serial Number(s)	and their derivatives
Shire 39 / 43 / 49	BS1522	4D24	HPiVS/R1105-007-I-01	XX-2400-X	

Name of Engine Manufacturer and Authorised Representative: E.P. Barrus Ltd, Launton Road, Bicester, OX26 4UR, England, United Kingdom

Authorised Compiler of Relevant Technical Documentation: Mr. Phil James

Name of Notified Body for exhaust emission assessment: HPi Verification Services Ltd., The Manor House, Howbery Park, Wallingford, OX10 8BA, United Kingdom. ID Number: 1521

Conformity assessment module used for exhaust emissions: ☐B+C ☐B+D ☑B+E ☐B+F ☐G ☐H

Other Community Directives applied:

Essential Requirements	Standards	Other normative document/method.	Technical file	Specify in more detail *= Mandatory standard.
Annex 1.B- Exhaust Emissions				
B.1 Engine Identification	☐	☑ RCD (II)	☑	2013/53/EU
B.2 Exhaust emission requirements	☑*	☐	☐	* EN ISO 8178 - 4:2007
B.3 Durability	☐	☑	☐	2013/53/EU
B.4 Owner's Manual	☑	☐	☑	ISO10240
Annex 1. C- Noise Emissions	See Declaration of Conformity of the craft in which the engine(s) has(have) been installed			

This declaration of conformity is issued under the sole responsibility of the authorised representative. I declare on behalf of the engine manufacturer that the engine will meet the exhaust emission requirements of Directive 2013/53/EU when installed in a recreational craft, in accordance with the instructions accompanying the engine and that this engine must not be put into service until the recreational craft into which it is to be installed has been declared

in conformity with the relevant provisions of the Directive 2013/53/EU. In case of a reasoned request by the national authority, we will supply the relevant technical information of the above-named engines to the person in charge.

Tim Hart
Sales Director
Signed: Bicester, UK Date: 18/01/2019

2. **Declaration of Conformity for Recreational Craft Propulsion Engine with the requirements of the Recreational Craft Regulations 2017 (UKCA Marking).**

Name of Engine Manufacturer: **E.P.Barrus LTD**

Name of Authorised Representative: **E.P.Barrus LTD**
Address: **E.P.Barrus LTD, Launton Road, Bicester, Oxon, OX26 4UR, England, United Kingdom**

Name of Notified Body for exhaust emission assessment: HPi CEproof Ltd
Address: HPi CEproof Ltd, The Manor House, Howbery Park
Town: Wallingford Post Code: OX10 8BA
Country: United Kingdom ID Number: 1521

Conformity assessment module used for exhaust emissions: ☐ B+C ☐ B+D ☐ B+E ☐ B+F ☐ G ☐ H
Or engine type-approved according to: Directive 2013/53/EU
Other Community Directives applied:

Description of Engine(s) and Essential Requirements
Engine Type: Inboard Engine **Fuel Type**: Diesel **Combustion Cycle**: 4 Stroke
Identification of Engine(s) covered by this Declaration of Conformity

Engine Model	**Engine Type**	**Engine Family code**	**Type Approval Certificate Number**
Shire 39 / 43 / 49	BS1522	4D24	HPiUK-R1105-T007-I-01-00

Essential Requirements	Standards	Other normative document/method.	Technical file	Specify in more detail *= Mandatory standard.
Annex 1.B- Exhaust Emissions				
B.1 Engine Identification	☐	☑ RCD (**II**)	☑	2013/53 EU
B.2 Exhaust emission requirements	☑*	☐	☐	* EN ISO 8178-4:2017 Test Cycle 1
B.3 Durability	☐	☐	☐	2013/53 EU
B.4 Owner's Manual	☑	☐	☐	ISO10240
Annex 1. C- Noise Emissions	See Declaration of Conformity of the craft in which the engine(s) has(have) been installed			

This declaration of conformity is issued under the sole responsibility of the manufacturer. I declare on behalf of the engine manufacturer that the engine(s) [is (are) in conformity with the type(s) for which above mentioned EC type-examination or type approval certificate(s)

has (have) been issued and][1] will meet the requirements of the Recreational Craft Regulations 2017 when installed in a recreational craft, in accordance with the engine manufacturer's supplied instructions and that this (these) engine(s) must not be put into service until the recreational craft which it is (they are) to be installed has been declared in conformity with the relevant provisions of the above mentioned Directives.

Tim Hart
Sales Director
Signed: Bicester, UK
Date: 07/07/2021

3. Declaration of Incorporation of Partly Completed Machinery

(Original declaration according to Directive 2006/42/EC, Annex II, part 1B)

1. The manufacturer:	E. P. Barrus Limited Glen Way Launton Road Bicester OX26 4UR England United Kingdom			
2. Authorised Compiler of Relevant Technical Documentation:	Mr. Phil James Glen Way Launton Road Bicester OX26 4UR England United Kingdom			
3. Partly Completed Machinery:	Designation:	Marine engines for propulsion of, and incorporation into, watercraft.		
	Description:		Serial No.:	and their derivatives.
		Shire 39	XX-2400-X	
		Shire 43	XX-2400-X	
		Shire 49	XX-2400-X	
	Base Engine:	BS1522		
4. The essential health and safety requirements of the Directive 2006/42/EC, Annex I, relating to the design and construction of the engine have been applied and fulfilled as shown in Annex A of this Declaration. The relevant technical documentation is compiled in accordance with part B of Annex VII of the Directive.				
5. In case of a reasoned request by the national authority, we will supply the relevant technical information of the above named engines to the person in charge.				
6. This partly completed machinery must not be put into service until the final machinery into which it has been incorporated has been declared in conformity with the provisions of this directive, where appropriate.				
7. This declaration is made on 18 January 2019 in Bicester, Oxfordshire.				
Tim Hart Sales Director E. P. Barrus Limited				

4. EU Declaration of Conformity with the Exhaust Emissions Requirements of Directive 2013/53/EU

(Original declaration according to Directive 2013/53/EU)

1. The manufacturer:	E. P. Barrus Limited Glen Way Launton Road Bicester OX26 4UR			
2. Authorised Compiler of Relevant Technical Documentation:	Mr. Phil James Glen Way Launton Road Bicester OX26 4UR			
3. Partly Completed Machinery:	Designation:	Marine engines for propulsion of, and incorporation into, watercraft.		
	Description:		Serial No.:	and their derivatives.
		Shire 39	XX-2400-X	
		Shire 43	XX-2400-X	
		Shire 49	XX-2400-X	
	Base Engine:	BS1522		
4. The engines detailed in section 3 comply with measures against the emission of gaseous and particulate pollutants from internal combustion engines. The engines comply with Directive 2013/53/EU (Recreational Craft Directive), Article 6, part 4 in that the engine will continue to meet the exhaust emission requirements of Directives, when installed into watercraft in accordance with the installation instructions that accompany the engine.				
5. In case of a reasoned request by the national authority, we will supply the relevant technical information of the above named engines to the person in charge.				
6. This partly completed machinery must not be put into service until the final machinery into which it has been incorporated has been declared in conformity with the provisions of this directive, where appropriate.				
7. This declaration is made on 18 January 2019 in Bicester, Oxfordshire.				
Tim Hart Sales Director E. P. Barrus Limited				

SERVICE RECORD CARD

Model: .....

Engine No: .....

Carried out by E.P.Barrus **Print Name:** PDI **Actual Hours:** **Signed:**	**Boat Builder Stamp:** **Commission of Boat and Hand Over to Customer. (Refer to the Installation Check List Page in this Manual).** **Date:** **Signed:**
Dealer Stamp: 1st **Actual Hours:** **Signed:**	**Dealer Stamp:** 2nd **Actual Hours:** **Signed:**
Dealer Stamp: 3rd **Actual Hours:** **Signed:**	**Dealer Stamp:** 4th **Actual Hours:** **Signed:**
Dealer Stamp: 5th **Actual Hours:** **Signed:**	**Dealer Stamp:** 6th **Actual Hours:** **Signed:**

Please refer to Owner's Manual for service intervals